APEM

"I" range Sealed pushbutton switches

- Sealed to IP67
- Dia. 12 mm or 16 mm bushing
- Momentary or latching
- Illuminated or non-illuminated
- Custom options

Comprehensive range

ERMEC
www.ermec.com
Distribución de componentes
eléctricos y electrónicos

Tel.: (+34) 902 450 160
Fax: (+34) 902 433 088
ermec@ermec.com
www.ermec.com

ERMEC
www.ermec.com
Distribución de componentes eléctricos y electrónicos
Tel.: (+34) 902 450 160
Fax: (+34) 902 433 088
ermec@ermec.com
www.ermec.com

The "I" range at a glance

Bushing dia. 12 mm (.472)

IP series
- **For harsh environments**
- Momentary or latching
- Square or round actuator
- Illuminated or non-illuminated

Page 5

IB and IS series
- **Snap-in or with threaded bushing**
- **Compact, light in weight**
- Momentary
- Round actuator

Page 15

Hole plug U6640 available on request.

Bushing dia. 16 mm (.630)

IZ series
- **Rear panel mounting**
- Metal or plastic bushing
- Momentary or latching
- Round actuator
- Illuminated or non-illuminated

Page 19

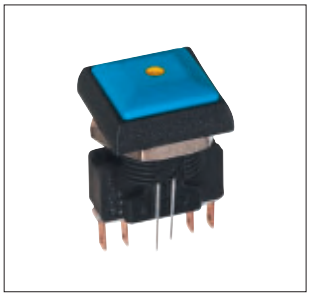

IR series
- **Up to 5A**
- **Screw version**
- Momentary or latching
- Square or round actuator
- Illuminated or non illuminated

Page 37

IA series
- **For harsh environments**
- **Resistant to frost, sand and hydrocarbons**
- Low profile
- Momentary
- Round actuator

Page 56

Sealing features Page 58

APEM's vertical integration and engineering expertise have led to the development of custom switches. Example 1 shows a catalogue product adapted to meet a specific need. Examples 2 & 3 show products entirely developed to customer's specifications and produced with specific tooling.

❑ Example 1 - Customized product based on an IP pushbutton

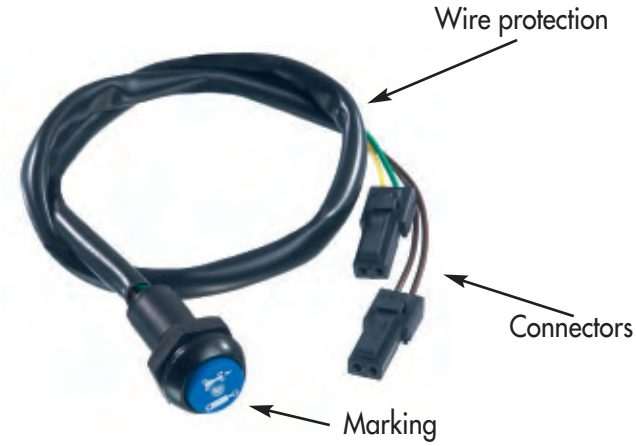

❑ Example 2 - IL pushbutton, customized product based on an IS pushbutton

Compared to a standard IS switch, this pushbutton has a longer threaded bushing allowing mounting onto a thicker panel.
This illuminated pushbutton also features a thinner bezel for compact matrix mounting.

❑ Example 3 - 100 % custom product based on an IP pushbutton : dia. 17 mm actuator

A firm specialized in satellite locating systems asked APEM for a large pushbutton with a **dia. 17 mm actuator**. This emergency pushbutton was intended to be used in trucks and to be the interface of an embedded electronic box. The APEM solution was a normally closed IP-based custom product. Two new parts were created :

- a plunger with a 17 mm diameter
- a raised frame preventing inadvertent actuation or may have the function of a finger-guide.

ERMEC
www.ermec.com
Distribución de componentes eléctricos y electrónicos
Tel.: (+34) 902 450 160
Fax: (+34) 902 433 088
ermec@ermec.com
www.ermec.com

Custom configurations can be produced using the following options, combined or not with standard elements, to meet your requirements.

❑ Marking

Pad printing, hot stamping, laser etching

❑ Colours

- "Desert tan" colour for camouflage in desert areas
- Glossy actuator finish
- "Soft feel" painted bushing and actuator

Desert tan

Glossy actuator

❑ Terminals

Colours, length and section
Materials : PVC, teflon, neoprene, external LED resistor
Wire preparation : pre-stripped, tinned, with connector, straight cut

Lead colours

Cable

Flying leads and connector

❑ Sealing

Overmolding (back end total sealing)
Tube + epoxy
Heat shrink sleeves (electrical insulation)

IP series

Pushbutton switches for harsh environments - bushing Ø 12 mm - momentary

Distinctive features and specifications

- ❑ **Illuminated or non-illuminated**
- ❑ **Tactile feedback**
- ❑ **Wide variety of configurations**
- ❑ **Flat round actuator for optional marking**
- ❑ **Sealed to IP67**

ENVIRONMENTAL SPECIFICATIONS

- Front panel sealing : IP67 according to IEC 60529
  IP69K according to DIN 40050-9 (non-illuminated) with cap U5125
- Shock resistance : 100 g according to IEC 512-4, test 6c
- Vibration resistance : 10-500Hz - 10 g according to IEC 512-4, test 6d
- Salt spray : IEC 512-6, test 11f
- Robustness (non-illuminated) : IK06 according to EN 50102 (1 joule)
- Operating temperature : -40°C to +85°C

ELECTRICAL SPECIFICATIONS

- Max. current/voltage rating with resistive load (gold plated silver contacts):
  5A 28VDC, 70.000 cycles
  0,2A 48VDC, 500.000 cycles
  0,5A 48VAC, 500.000 cycles
- Initial contact resistance : 100 mΩ max.
- Insulation resistance : 1 GΩ min. at 500VDC
- Dielectric strength : 1.500 Vrms
- Contact bounce : 10 ms

LED COMPONENT SPECIFICATIONS

LED colour	Forward current	Typ. forward voltage	Max. forward voltage
Super red (L0S)	20mA	2,1V	2,3V
Yellow (L0Y)	20mA	2,1V	2,3V
Green (L0G)	20mA	2,1V	2,3V
Blue (L0B)	20mA	3,2V	3,8V
White (L0W)	20mA	3,35V	4,25V

A resistor must be series-connected by the user.

$$\text{Resistor value} = \frac{\text{supply voltage - LED forward voltage}}{\text{LED forward current}}$$

GENERAL SPECIFICATIONS

- Panel thickness : 1,5 mm (.059) min.
  4 mm (.157 max.)
- Total travel :
  Funct. 3 : 1,7 mm (.067) +/- 0,3 mm
  Funct. 5 : 1,3 mm (.051) +/- 0,3 mm
- Typical operating force : 6N +/- 2N
- Mechanical life : 1.000.000 cycles
- Torque : 1,5 Nm max. applied to nut
- Soldering : 320°C max. for 3 sec.

MATERIALS

- Case : thermoplastic UL94-V0
- Actuator : polyamide 6/6
- Bushing/bezel : zinc die-cast (zamac), black painted
- Contacts : silver, gold plated (std)
  brass, gold plated (for option 104)
- Multi-wire lead AWG20,
  section 0,6 mm²
- LED wire : AWG26, section 0,12 mm²
- Lens : polycarbonate
- Terminal seal : epoxy

AGENCY APPROVAL

2A 125VAC/250VAC
File E83438

Availability : consult factory for details of approved models.

Marking : to order switches marked UL, complete ordering format.

MOUNTING

Panel cut-out

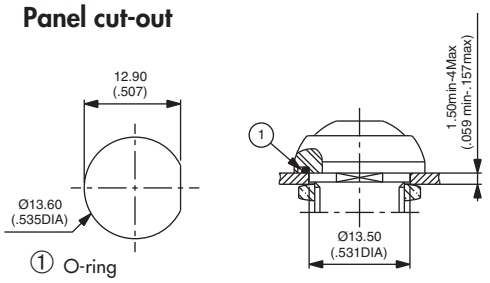

Matrix mounting

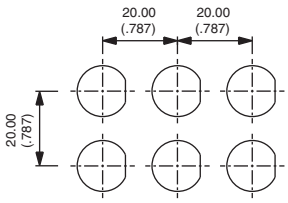

Back of panel space requirement

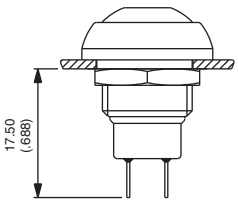

IP series

Pushbutton switches for harsh environments - bushing Ø 12 mm - momentary

Overview

MODEL STRUCTURE

IP

SERIES

Actuator shape

C	Square
R	Round, curved
P	Round, flat

Electrical function

3	Normally open (NO)
5	NC/NO combined (non-illuminated)

Terminals

S	Solder lugs
F	Flying leads
P	Straight PC
Z1	Quick-connect (non-ill., NO only)

Contacts

AD	Silver, gold plated (standard)
CD	Brass, gold plated (option 104)

OPTIONS

Actuator colour

1	Blue
1/4	Dark blue
2	Black
3	Green
5	Yellow
6	Red
7/1	White
8	Bright chrome
9	Orange

LED colour

Blank	Non-illum.
L0S	Super red
L0Y	Yellow
L0G	Green
L0B	Blue
L0W	White

Options

100	Satin chrome bezel
101	Bright chrome bezel
104	High actuator (non-illum. round models only)

Option 104
If combined with electrical function 5 (NC/NO), this option should be ordered with **CD** contacts (brass, gold plated). Current/voltage rating : 100mA 30VDC

Approval

UL
Consult factory for detail of approved models.

ERMEC
www.ermec.com
Distribución de componentes eléctricos y electrónicos
Tel.: (+34) 902 450 160
Fax: (+34) 902 433 088
ermec@ermec.com
www.ermec.com

ABOUT THIS SERIES
On the following pages, you will find successively :
model structure of switches and options in the same order as in above chart

Dimensions : first dimensions are in mm while inches are shown as bracketted numbers.

NOTICE : please note that not all combinations of above numbers are available.
Refer to the following pages for further information.

A sealing boot is available to protect the switches against frost and sand. It is presented at the end of this catalogue.

Mounting accessories : Standard hardware supplied : 1 hex nut 14 mm (.551) across flats and 1 O-ring.
Hex nut part number U166.

Packaging unit : 25 pieces

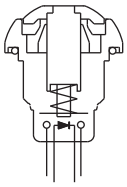

- High brightness illumination
- Five LED colours
- Tin plated LED terminals

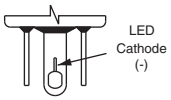

MODEL STRUCTURE

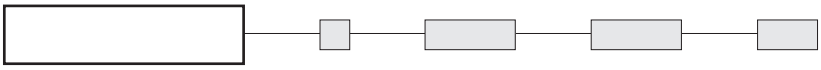

Solder lug terminals

IPC3SAD

Normally Open

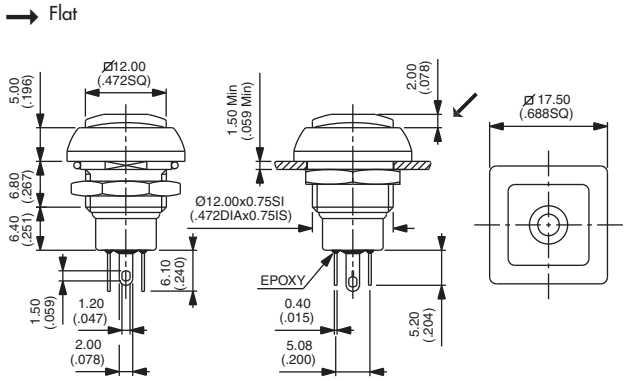

Also available with straight PC terminals : **IPC3PAD**
LED colour is indicated by the bottom of the switch.

Sealed flying lead terminals

IPC3FAD

Normally Open

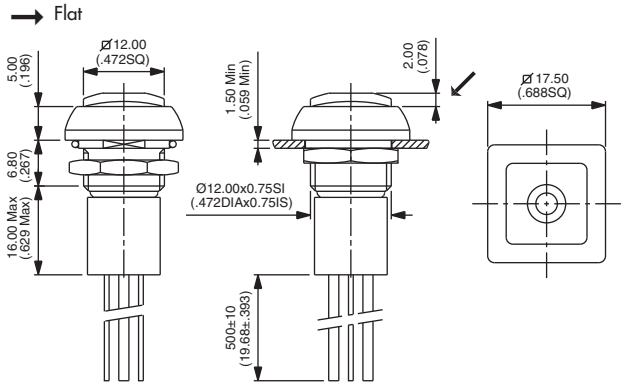

Wire colours : black : NO contact, red : LED anode(+), blue : LED cathode(-)

ACTUATOR COLOUR

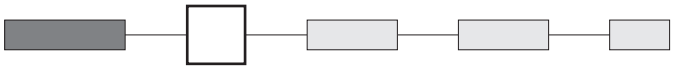

1 : blue - **1/4** : dark blue - **2** : black - **3** : green - **5** : yellow
6 : red - **7/1** : white - **8** : bright chrome - **9** : orange

LED COLOUR

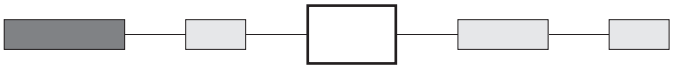

L0S : red - **L0Y** : yellow - **L0G** : green - **L0B** : blue
L0W : white

OPTIONS

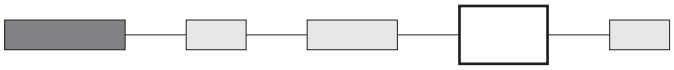

100 : Satin chrome bezel
101 : Bright chrome bezel

APPROVAL

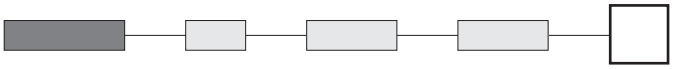

UL
Consult factory for details of approved models. To order switches marked UL, complete above box with "UL".

IP series

Pushbutton switches for harsh environments - bushing Ø 12 mm - momentary

Square - non-illuminated

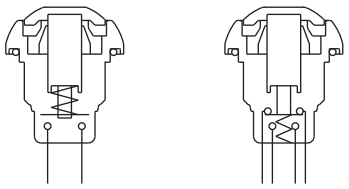

Function 3 (N0) Function 5 (NC/NO)

- Double function (NC/NO combined) with a short behind-panel depth

Straight **P** Quick-connect **Z1**

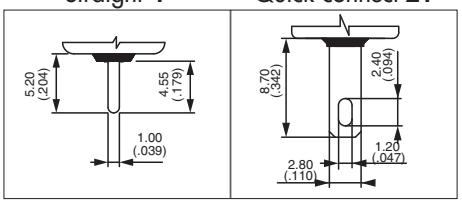

MODEL STRUCTURE

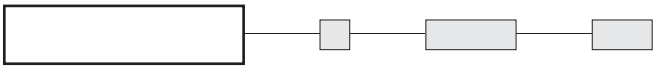

Solder lug terminals

IPC3SAD Normally Open

IPC5SAD NC/NO combined

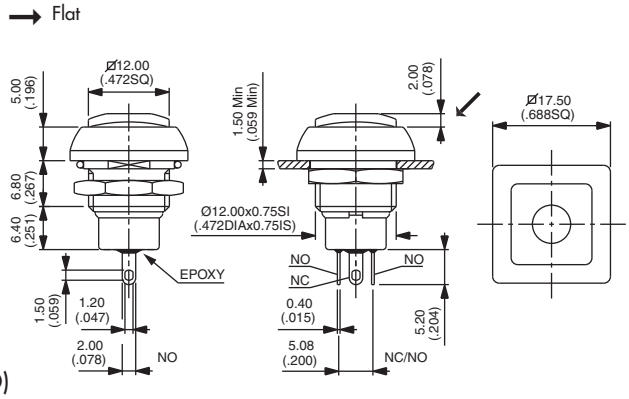

Also available with straight PC terminals : **IPC3PAD** (NO) or **IPC5PAD** (NC/NO) and quick-connect terminals : **IPC3Z1AD** (NO only)

Sealed flying lead terminals

IPC3FAD Normally Open

IPC5FAD NC/NO combined

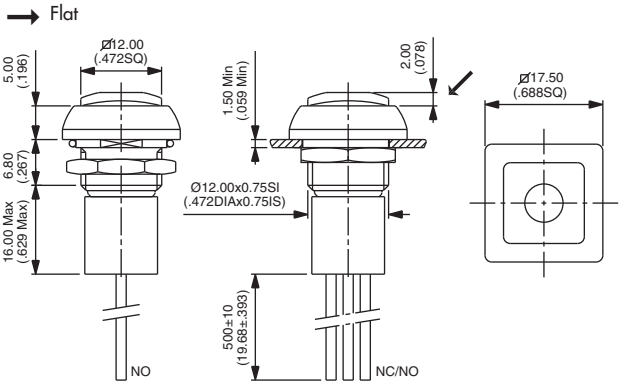

Wire colours (NC/NO) : black : NO, blue : NC

ACTUATOR COLOUR

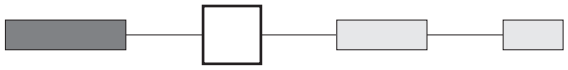

1 : blue - **1/4** : dark blue -**2** : black - **3** : green - **5** : yellow - **6** : red - **7/1** : white - **8** : bright chrome - **9** : orange

OPTIONS

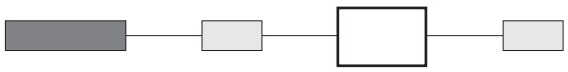

100 : Satin chrome bezel
101 : Bright chrome bezel

APPROVAL

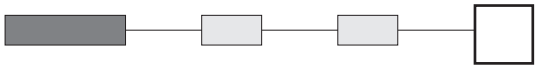

UL

Consult factory for details of approved models. To order switches marked UL, complete above box with "UL".

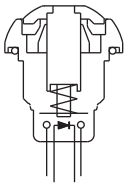

- High brightness illumination
- Five LED colours
- Tin plated LED terminals

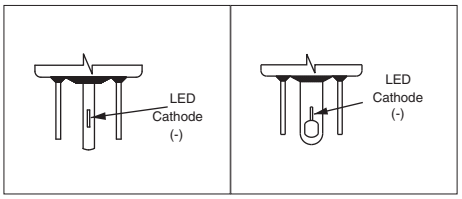

MODEL STRUCTURE

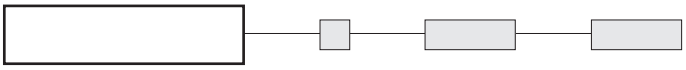

Solder lug terminals

IPR3SAD

Normally Open

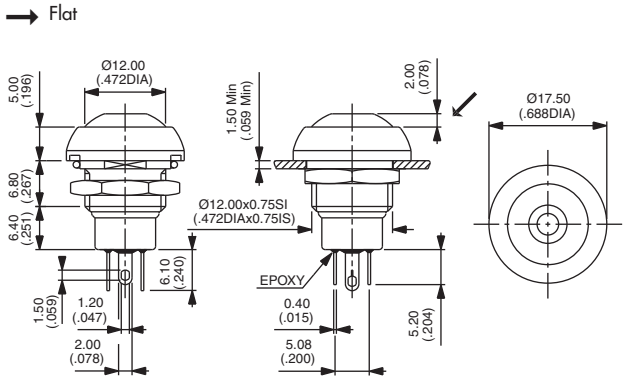

Also available with straight PC terminals : **IPR3PAD**
LED colour is indicated by the bottom of the switch.

Sealed flying lead terminals

IPR3FAD

Normally Open

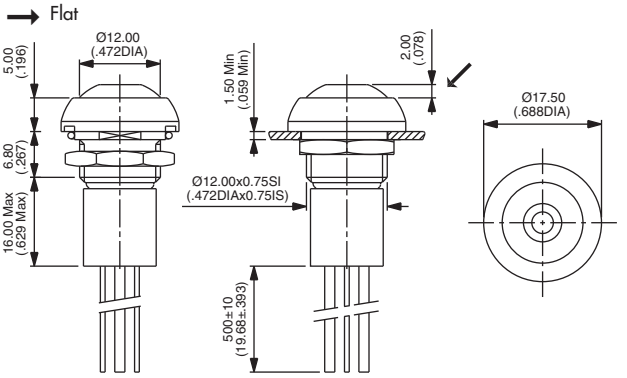

Wire colours : black : NO contact, red : LED anode(+), blue : LED cathode(-)

ACTUATOR COLOUR

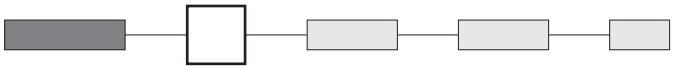

1 : blue - **1/4** : dark blue - **2** : black - **3** : green - **5** : yellow
6 : red - **7/1** : white - **8** : bright chrome - **9** : orange

LED COLOUR

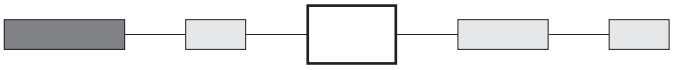

L0S : red - **L0Y** : yellow - **L0G** : green - **L0B** : blue
L0W : white

OPTIONS

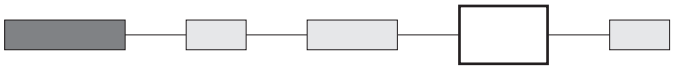

100 : Satin chrome bezel
101 : Bright chrome bezel

APPROVAL

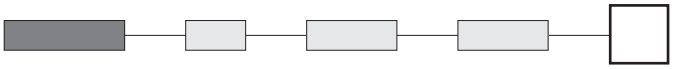

UL
Consult factory for details of approved models. To order switches marked UL, complete above box with "UL".

IP series

Pushbutton switches for harsh environments - bushing Ø 12 mm - momentary

Round - non-illuminated

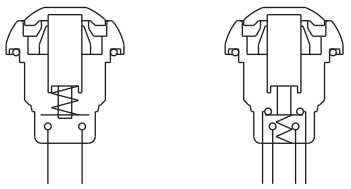

Function 3 (NO) Function 5 (NC/NO)

- Double function (NC/NO combined) with a short behind-panel depth

Straight **P** Quick-connect **Z1**

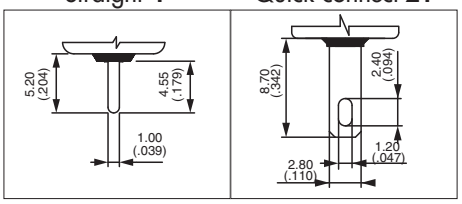

MODEL STRUCTURE

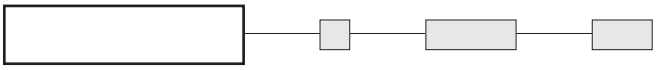

Solder lug terminals

Curved actuator, NO
IPR3SAD
Curved actuator, NC/NO
IPR5SAD

Flat actuator, NO
IPP3SAD
Flat actuator, NC/NO
IPP5SAD

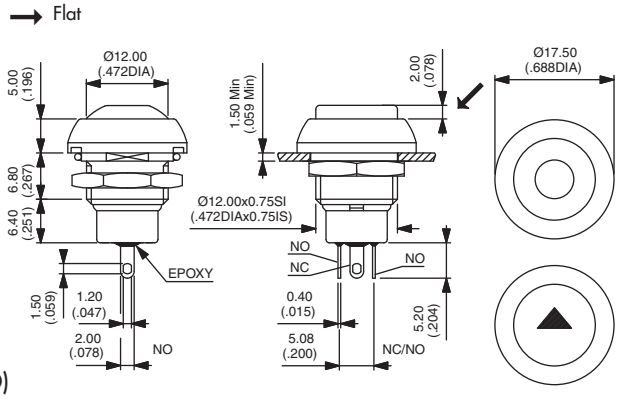

Also available with straight PC terminals : **IP•3PAD** (NO) or **IP•5PAD** (NC/NO) and quick-connect terminals : **IP•3Z1AD** (NO only)

Sealed flying lead terminals

Curved actuator, NO
IPR3FAD
Curved actuator, NC/NO
IPR5FAD

Flat actuator, NO
IPP3FAD
Flat actuator, NC/NO
IPP5FAD

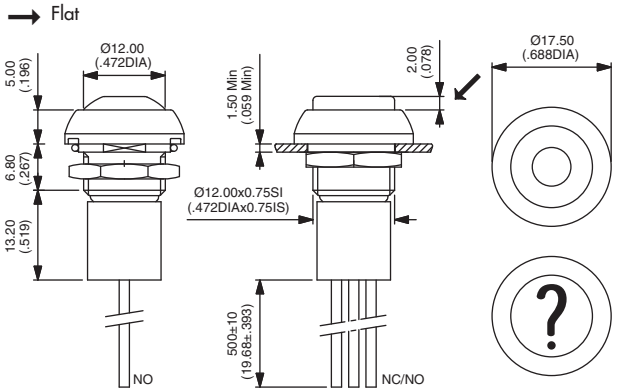

Wire colours (NC/NO) : black : NO, blue : NC

ACTUATOR COLOUR

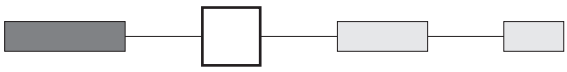

1 : blue - **1/4** : dark blue -**2** : black - **3** : green - **5** : yellow
6 : red - **7/1** : white - **8** : bright chrome - **9** : orange

Actuator marking available on IPP models (symbol 10 mm max.). On request.

OPTIONS

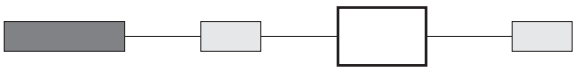

100 : Satin chrome bezel
101 : Bright chrome bezel
104 : High actuator - If combined with function 5 (NC/NO), order with CD contacts (instead of AD contacts).

APPROVAL

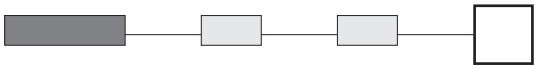

UL
Consult factory for details of approved models. To order switches marked UL, complete above box with "UL".

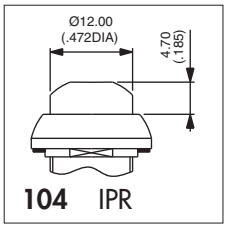

104 IPR

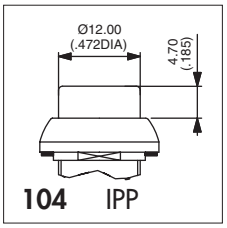

104 IPP

IP series

Pushbutton switches for harsh environments - bushing Ø 12 mm - latching

Distinctive features and specifications

- **Latching action**
  Actuator remains in the low position when "ON".
- **Illuminated or non-illuminated**
- **Compact**
  Behind-panel depth less than 20 mm (.787)
- **Flat round actuator for optional marking**
- **Sealed to IP67**

ENVIRONMENTAL SPECIFICATIONS

- Front panel sealing : IP67 according to IEC 60529
- Shock resistance : 100 g according to IEC 512-4, test 6c
- Vibration resistance : 10-500Hz - 10 g according to IEC 512-4, test 6d
- Salt spray : IEC 512-6, test 11f
- Robustness (non-illuminated) : IK06 according to EN 50102 (1 joule)
- Operating temperature : -40°C to +85°C

ELECTRICAL SPECIFICATIONS

- Max. current/voltage rating with resistive load :
  4A 12VDC, 200.000 cycles
  1A 48VDC, 200.000 cycles
  2A 48VDC, 100.000 cycles
  3A 48VDC, 75.000 cycles
  1A 72VDC, 15.000 cycles
- Initial contact resistance : 100 mΩ max.
- Insulation resistance : 1 GΩ min. at 500VDC
- Dielectric strength : 1.500 Vrms between terminals
  1.000 VAC rms between terminals and frame

LED COMPONENT SPECIFICATIONS

LED colour	Forward current	Typ. forward voltage	Max. forward voltage
Super red (L0S)	20mA	1,95V	1,95V
Yellow (L0Y)	20mA	2V	2,05V
Green (L0G)	20mA	3,2V	3,70V
Blue (L0B)	20mA	3,2V	4V

A resistor must be series-connected by the user.

$$\text{Resistor value} = \frac{\text{supply voltage - LED forward voltage}}{\text{LED forward current}}$$

GENERAL SPECIFICATIONS

- Panel thickness : 1,5 mm (.059) min.
  5,5 mm (.217) max.
- Total travel : 2,5 mm (.098) +/- 0,3 mm
- Typical operating force : 5 N +/- 2N
- Mechanical life : 200.000 cycles
- Torque : 1,5 Nm max. applied to nut
- Soldering : 320°C max. for 3 sec.

MATERIALS

- Case : thermoplastic, UL 94-V0
- Actuator : polyamide 6/6
- Bushing/bezel : zinc die-cast (zamak), black painted
- Contacts : silver, gold plated
- Multi-wire lead AWG20, section 0,6 mm²
- LED wire : AWG26, section 0,12 mm²
- Lens : polycarbonate
- Terminal seal : epoxy

AGENCY APPROVAL

2A 125VAC/250VAC
File E83438

Availability : consult factory for details of approved models.

Marking : to order switches marked UL, complete appropriate box of ordering format.

MOUNTING

Panel cut-out

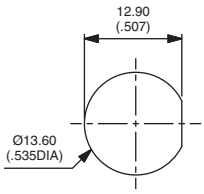

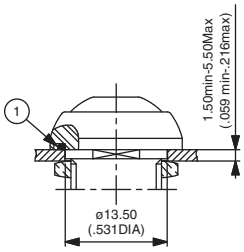

① O-ring

Matrix mounting

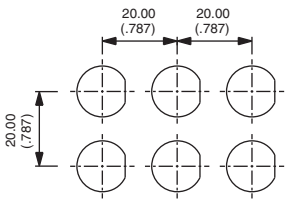

Back of panel space requirement

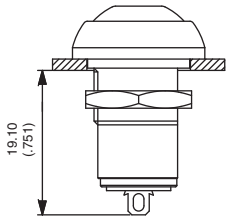

IP series

Pushbutton switches for harsh environments - bushing Ø 12 mm - latching

Overview

MODEL STRUCTURE

IP				
SERIES	Actuator shape	Electrical function	Terminals	Contacts

Actuator shape

C	Square
R	Round, curved
P	Round, flat

Electrical function

1	OFF - ON

Terminals

S	Solder lug
F	Flying leads
Z1	Quick-connect
P	Straight PC

Contacts

AD	Silver, gold plated

OPTIONS

Actuator colour

1	Blue
1/4	Dark blue
2	Black
3	Green
5	Yellow
6	Red
7/1	White
8	Bright chrome
9	Orange

LED colour

Blank	Non-illum.
L0S	Red
L0Y	Yellow
L0G	Green
L0B	Blue

Options

100	Satin chrome bezel
101	Bright chrome bezel
104	High actuator (non-illum. round models only)

Approval

UL

Consult factory for detail of approved models.

ERMEC
www.ermec.com
Distribución de componentes eléctricos y electrónicos
Tel.: (+34) 902 450 160
Fax: (+34) 902 433 088
ermec@ermec.com
www.ermec.com

ABOUT THIS SERIES

On the following pages, you will find successively :
model structure of switches and options in the same order as in above chart

Dimensions : first dimensions are in mm while inches are shown as bracketted numbers.

NOTICE : please note that not all combinations of above numbers are available.
Refer to the following pages for further information.

A sealing boot is available to protect the switches against frost and sand (P/N U5125).
It is presented at the end of this catalogue..

Mounting accessories : Standard hardware supplied : 1 hex nut 14 mm (.551) across flats and 1 O-Ring.

Packaging unit : 25 pieces

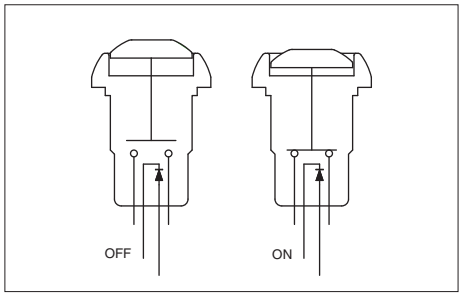

- Four LED colours
- Tin plated LED terminals

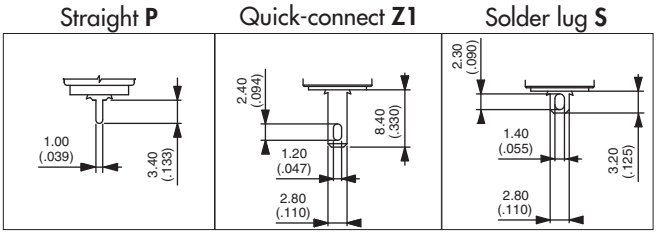

MODEL STRUCTURE

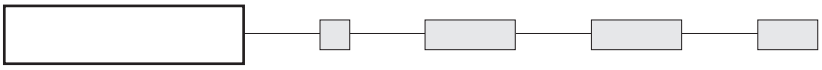

Square models

Solder lug terminals
IPC1SAD OFF - ON

Flying lead terminals
IPC1FAD OFF - ON

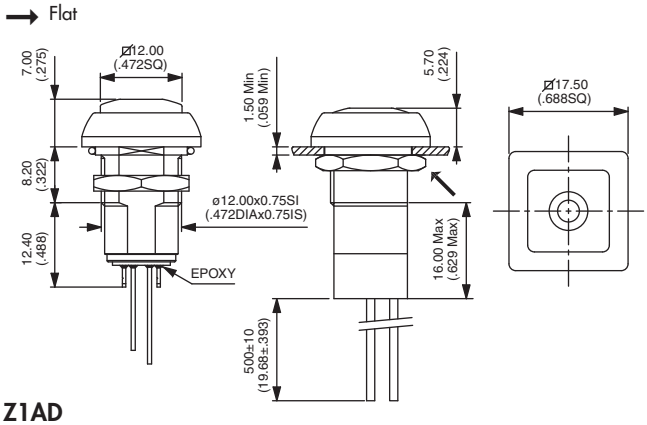

Also available with straight PC : **IPC1PAD** or quick-connect terminals : **IPC1Z1AD**

Round models

Solder lug terminals
IPR1SAD OFF - ON

Flying lead terminals
IPR1FAD OFF - ON

Wire colours : black : contact, red : LED anode(+), blue : LED cathode(-)

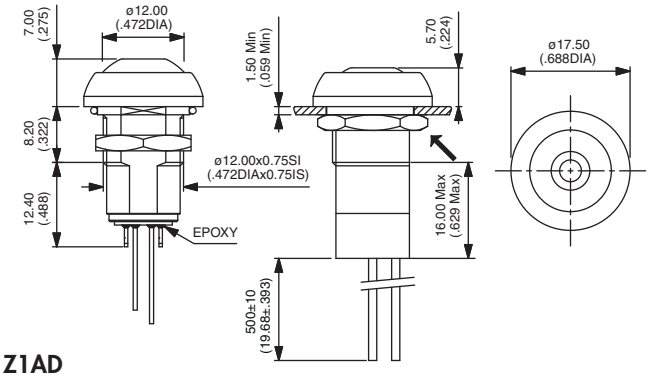

Also available with straight PC : **IPR1PAD** or quick-connect terminals : **IPR1Z1AD**

ACTUATOR COLOUR

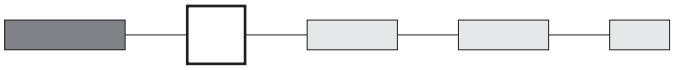

1 : blue - **1/4** : dark blue - **2** : black - **3** : green - **5** : yellow
6 : red - **7/1** : white - **8** : bright chrome - **9** : orange

LED COLOUR

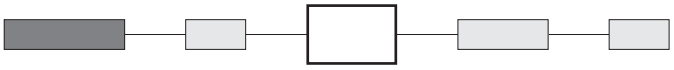

L0S : red - **L0Y** : yellow - **L0G** : green - **L0B** : blue

OPTIONS

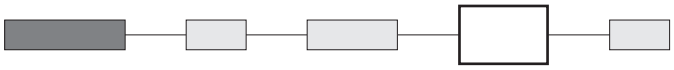

100 : Satin chrome bezel
101 : Bright chrome bezel

APPROVAL

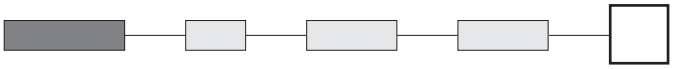

UL

Consult factory for details of approved models. To order switches marked UL, complete above box with "UL".

IP series

Pushbutton switches for harsh environments - bushing Ø 12 mm - latching

Square or round - non-illuminated

MODEL STRUCTURE

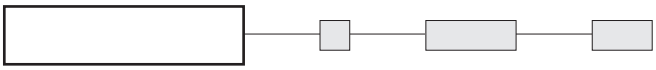

Square models

Solder lug terminals
IPC1SAD OFF - ON

Flying lead terminals
IPC1FAD OFF - ON

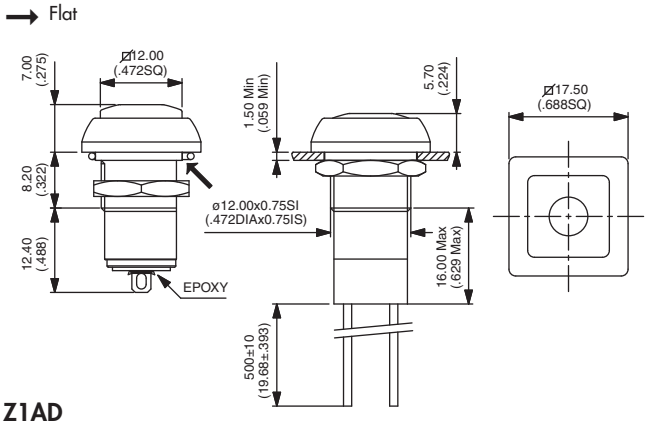

Also available with straight PC : **IPC1PAD** or quick-connect terminals : **IPC1Z1AD**

Round models

CURVED ACTUATOR
Solder lug terminals
IPR1SAD OFF - ON
Flying lead terminals
IPR1FAD OFF - ON

FLAT ACTUATOR
Solder lug terminals
IPP1SAD OFF - ON
Flying lead terminals
IPP1FAD OFF - ON

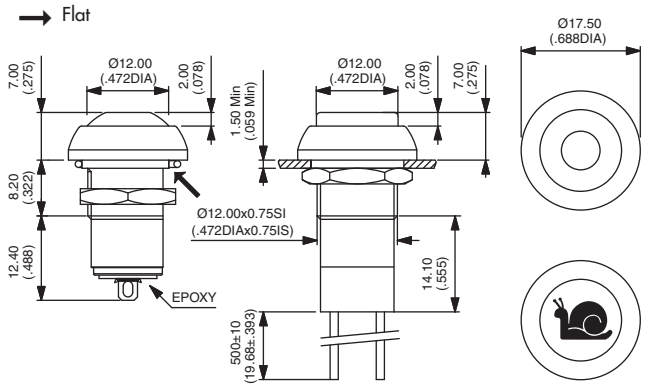

Also available with straight PC : **IP•1PAD** or quick-connect terminals : **IP•1Z1AD**

ACTUATOR COLOUR

Actuator marking available on IPP models (symbol 10 mm max.). On request.

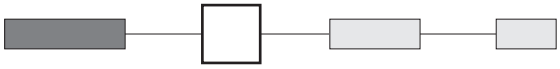

1 : blue - **1/4** : dark blue - **2** : black - **3** : green - **5** : yellow - **6** : red - **7/1** : white - **8** : bright chrome - **9** : orange

OPTIONS

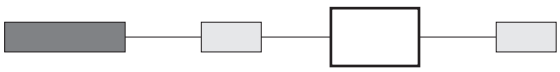

100 : Satin chrome bezel
101 : Bright chrome bezel
104 : High actuator (for round model only)

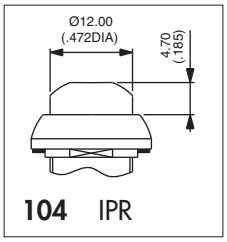

104 IPR

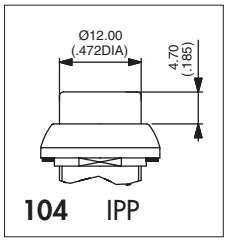

104 IPP

APPROVAL

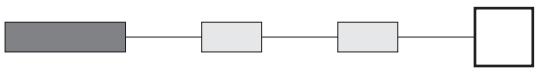

UL

Availability : consult factory for details of approved models.
Marking : to order switches marked UL, complete above box with "UL".

ERMEC
www.ermec.com
Distribución de componentes eléctricos y electrónicos
Tel.: (+34) 902 450 160
Fax: (+34) 902 433 088
ermec@ermec.com
www.ermec.com

IB and IS series

Sealed pushbutton switches - bushing Ø 12 mm - momentary

Distinctive features and specifications

- ❑ **Snap-in and threaded bushing models**
- ❑ **Compact, light in weight**
  - Behind-panel depth of 13 mm (.512) only
  - 50 % reduction in weight compared to metallic models
- ❑ **Tactile feedback**
- ❑ **Sealed to IP67**

ENVIRONMENTAL SPECIFICATIONS

- Front panel sealing : IP67 according to IEC 60529
- Shock resistance : 100 g according to IEC 512-4, test 6c
- Vibration resistance : 10-500 Hz - 10 g according to IEC 512-4, test 6d
- Salt spray : IEC 512-6, test 11f
- Operating temperature : -40°C to +85°C

MATERIALS

- Case : thermoplastic UL94-V0
- Actuator : polyamide 6/6
- Bushing/bezel : polyamide 6/6
- Contacts : silver, gold plated
- Terminal seal : epoxy

ELECTRICAL SPECIFICATIONS

- Max. current/voltage rating with resistive load :
  400mA 32VAC - 100mA 50VDC - 125mA 125VAC
- Initial contact resistance : 50 mΩ max.
- Insulation resistance : 1 GΩ min. at 500VDC
- Dielectric strength : 1.000 Vrms
- Electrical life at full load : 500.000 cycles

AGENCY APPROVAL

2A 125VAC/250VAC
File E83438

Availability : consult factory for details of approved models.

Marking : to order switches marked UL, complete approrpiate box of ordering format.

GENERAL SPECIFICATIONS

- Panel thickness :
  - IB series : 0,8 mm (.031) min. - 1,8 mm (.071) max.
  - IS series : 1,5 mm (.059) min. - 4 mm (.157) max.
- Total travel : 1,9 mm (.074) +/- 0,3 mm
- Typical operating force : 7N +/- 3N
- Mechanical life : 1.000.000 cycles
- Torque : 1,5 Nm max. applied to nut
- Soldering : 300°C max. for 3 seconds

Example of custom switch: see end of the series.

Panel mounting : see next pages.

ERMEC
www.ermec.com
Distribución de componentes eléctricos y electrónicos
Tel.: (+34) 902 450 160
Fax: (+34) 902 433 088
ermec@ermec.com
www.ermec.com

IB and IS series

Sealed pushbutton switches - bushing Ø 12 mm - momentary

Overview

MODEL STRUCTURE

SERIES

IB	Snap-in
IS	Threaded bushing

Actuator shape

R	Round, curved
P	Round, flat

Electrical function

3	Normally open (NO)

Terminals

S	Solder lug
Z1	Quick-connect 2,8 x 0,5 mm
P	Straight PC

Contacts

AD	Silver, gold plated

OPTIONS

Actuator colour

1	Blue
1/4	Dark blue
2	Black
3	Green
5	Yellow
6	Red
7/1	White
8	Bright chrome
9	Orange
A	Satin chrome

Bezel finish

00	Black (std)
08	Bright chrome (IS only)
10	White
20	Satin chrome (IS only)

Option

104	High actuator

Approval

UL

Consult factory for detail of approved models.

ERMEC
www.ermec.com
Distribución de componentes eléctricos y electrónicos
Tel.: (+34) 902 450 160
Fax: (+34) 902 433 088
ermec@ermec.com
www.ermec.com

ABOUT THIS SERIES

On the following pages, you will find successively :
- model structure of switches and options in the same order as in above chart

Dimensions : first dimensions are in mm while inches are shown as bracketted numbers.

NOTICE : please note that not all combinations of above numbers are available.
Refer to the following pages for further information.

A sealing boot is available to protect the switches against frost and sand. It is presented at the end of this catalogue.

Mounting accessories : Standard hardware supplied : 1 flat seal (IB series)
1 hex nut 14 mm (.551) across flats and 1 flat seal (IS series). Hex nut part number U166.

Packaging unit : 50 pieces

IB and IS series

Sealed pushbutton switches - bushing Ø 12 mm - momentary

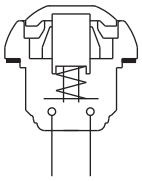

- Ten actuator colours
- Curved or flat actuator
- Antirotation bushing

Straight **P**

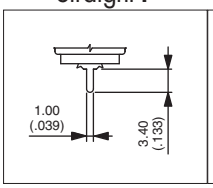

Solder lug **S**

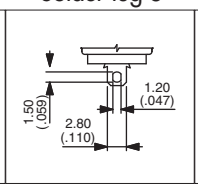

Quick-connect **Z1**

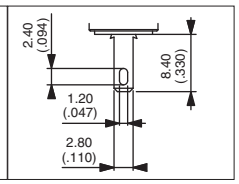

MODEL STRUCTURE

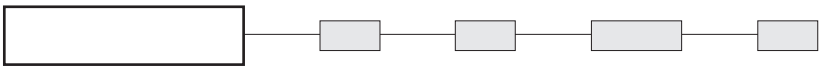

Snap-in mounting - solder lugs

→ Flat

Panel thickness : 0,8 mm to 1,8 mm

Curved actuator
IBR3SAD — Normally open

Flat actuator
IBP3SAD — Normally open

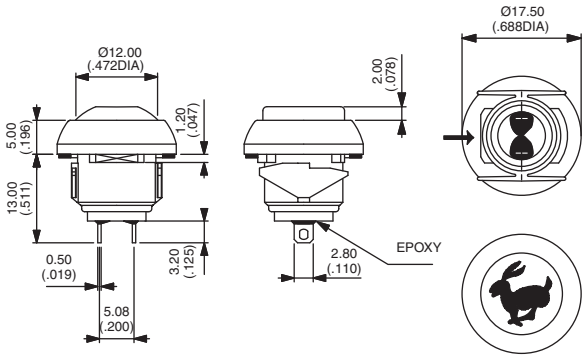

Also available with straight PC : **IBR•3PAD** or quick-connect terminals : **IB•3Z1AD**

Mounting by threaded bushing - solder lugs

→ Flat

Panel thickness : 1,5 mm to 4 mm

Curved actuator
ISR3SAD — Normally open

Flat actuator
ISP3SAD — Normally open

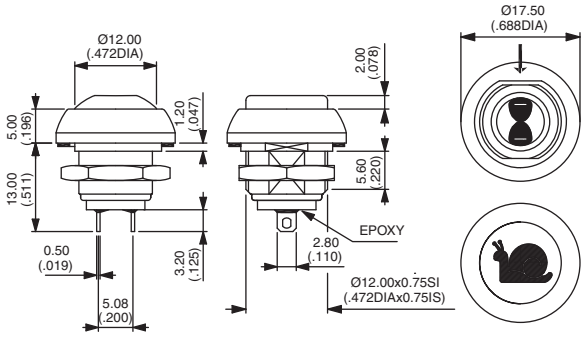

Also available with straight PC : **IS•3PAD** or quick-connect terminals : **IS•3Z1AD**

ACTUATOR COLOUR

Actuator marking available on IBP and ISP models (symbol 10 mm max.). On request.

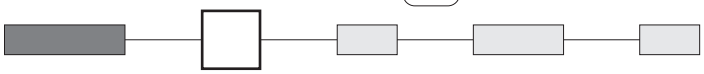

1 : blue - **1/4** : dark blue - **2** : black - **3** : green - **5** : yellow - **6** : red - **7/1** : white - **8** : bright chrome
9 : orange - **A** : satin chrome

BUSHING AND BEZEL FINISH

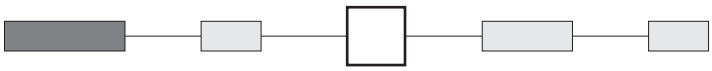

00 : Black (standard)
08 : Bright chrome (IS series only)
10 : White
20 : Satin chrome (IS series only)

ERMEC
www.ermec.com
Distribución de componentes eléctricos y electrónicos
Tel.: (+34) 902 450 160
Fax: (+34) 902 433 088
ermec@ermec.com
www.ermec.com

IB and IS series

Sealed pushbutton switches - bushing Ø 12 mm - momentary

ACTUATOR OPTION

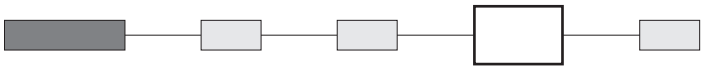

104 : High actuator

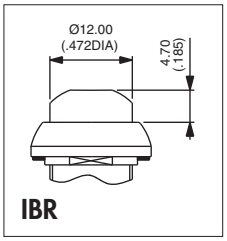

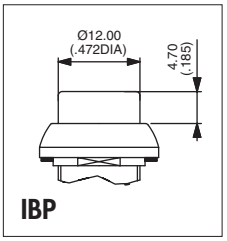

APPROVAL

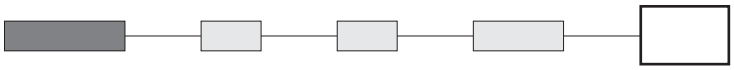

ERMEC
www.ermec.com
Distribución de componentes
eléctricos y electrónicos
Tel.: (+34) 902 450 160
Fax: (+34) 902 433 088
ermec@ermec.com
www.ermec.com

UL

Availability : consult factory for details of approved models.
Marking : to order switches marked UL, complete above box with "UL".

IB SERIES MOUNTING

Panel cut-out

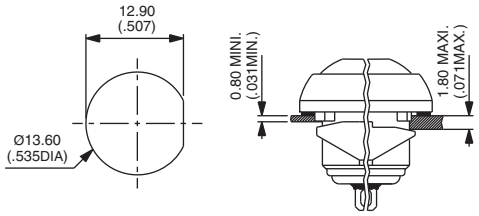

Matrix mounting

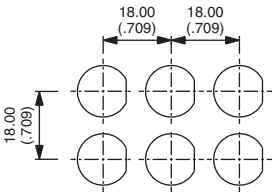

IS SERIES MOUNTING

Panel cut-out

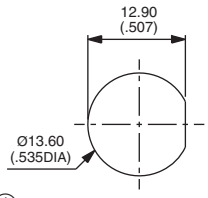

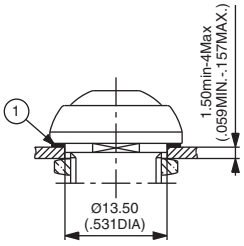

① Flat seal

Matrix mounting

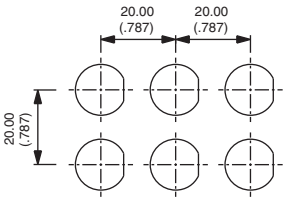

Example of custom switch

ISR3FADB22X1248-01

- Painted bushing and actuator, soft feel
- Flying leads (55 mm) + connector
- Overmolded rear part

IZ series

Rear mounted sealed pushbutton switches - bushing Ø 16 mm - metal - momentary

Distinctive features and specifications

- ❑ **Rear mounting for easier installation**
- ❑ **Momentary metal models**
- ❑ **Fixed or variable panel thickness**
- ❑ **Screw version available up to 4A**
- ❑ **Sealed to IP67**
- ❑ **Illuminated or non-illuminated**
- ❑ **Flat actuator for optional marking**

ENVIRONMENTAL SPECIFICATIONS

- Front panel sealing : IP67 according to IEC 60529
- Shock resistance : 100 g according to IEC 512-4, test 6c
- Vibration resistance : 10-500Hz - 10 g according to IEC 512-4, test 6d
- Salt spray : IEC 512-6, test 11f
- Operating temperature : -40°C to +85°C

ELECTRICAL SPECIFICATIONS

- Max. current/voltage rating with resistive load :
  - Gold plated silver contacts (code 4) : 200mA 48VDC - 200mA 250VAC
  - Silver contacts (code 2) - screw terminals : 2A 250VAC - 4A 48VDC
- Electrical life at full load : 500.000 cycles
- Initial contact resistance : 100 mΩ max.
- Insulation resistance : 1 GΩ min. at 500VDC
- Dielectric strength : 1.000 Vrms 50 Hz

LED COMPONENT SPECIFICATIONS			
LED colour	Forward current	Typ. forward voltage	Max. forward voltage
Super red (L0S)	20mA	2,1V	2,3V
Yellow (L0Y)	20mA	2,1V	2,3V
Green (L0G)	20mA	2,1V	2,3V
Blue (L0B)	20mA	3,2V	3,8V
White (L0W)	20mA	3,35V	4,25V

A resistor must be series-connected by the user.

$$\text{Resistor value} = \frac{\text{supply voltage - LED forward voltage}}{\text{LED forward current}}$$

On flying lead versions, the LED resistor can be integrated by APEM on request.

GENERAL SPECIFICATIONS

- Panel thickness :
  - IZM : 3 mm (.118) max.
  - IZN : 4 mm (.157) max.
- Total travel : 1,8 mm (.070) +/- 0,3 mm
- Typical operating force : 6N +/- 2N
- Mechanical life : 1.000.000 cycles
- Torque : IZN : 1 Nm max.
  IZM : 0,7 Nm max. applied to nut
- Soldering : 320°C max. for 3 sec.

MATERIALS

- Case : thermoplastic UL94-V0
- Plunger : polyamide
- Bushing/bezel : brass, nickel plated
- Contacts :
  4 : silver, gold plated
  2 : silver (screw terminals)
- Multi-wire lead AWG20, section 0,6 mm²
- LED wire : AWG26, section 0,12 mm²
- Lens : polycarbonate
- Terminal seal : epoxy

PANEL CUT-OUT

① Flat seal ② O-ring

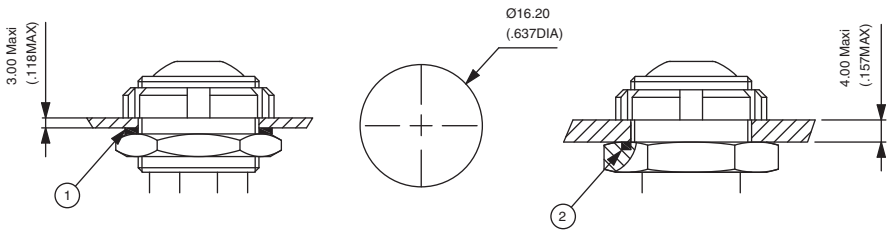

IZM (adjustable hex nut) IZN (fixed hex nut)

MATRIX MOUNTING

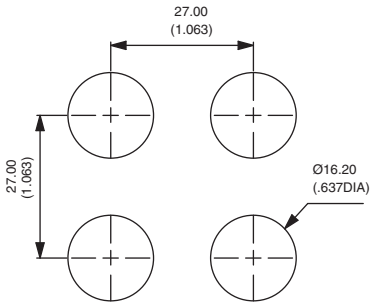

IZ series

Rear mounted sealed pushbutton switches - bushing Ø 16 mm - metal - momentary

Overview

MODEL STRUCTURE

IZ

SERIES

Model

- **M** Metal, **variable** panel thickness
- **N** Metal, **fixed** panel thickness

Actuator shape

- **R** Round, curved
- **P** Round, flat

Electrical function

- **3** Normally open (NO)

Terminals

- **S** Solder lugs
- **F** Flying leads
- **P** Straight PC
- **Z** Quick-connect (non-illuminated)
- **V** Screw (non-illuminated & N model only)

Contacts

- **4** Silver, gold plated
- **2** Silver (screw term.)

OPTIONS

Actuator colour

- **1** Blue
- **B** Dark blue
- **2** Black
- **3** Green
- **5** Yellow
- **6** Red
- **7** White
- **8** Bright chrome
- **9** Orange
- **A** Satin chrome

Bushing & bezel finish

- **N** Nickel plated

Other : on request.

LED colour

- **Blank** Non-illum.
- **L0S** Super red
- **L0Y** Yellow
- **L0G** Green
- **L0B** Blue
- **L0W** White

ERMEC
www.ermec.com
Distribución de componentes eléctricos y electrónicos
Tel.: (+34) 902 450 160
Fax: (+34) 902 433 088
ermec@ermec.com
www.ermec.com

ABOUT THIS SERIES

On the following pages, you will find successively :
model structure of switches and options in the same order as in above chart

Dimensions : first dimensions are in mm while inches are shown as bracketted numbers.

NOTICE : please note that not all combinations of above numbers are available.
Refer to the following pages for further information.

Mounting accessories : Standard hardware supplied :
- IZM : 1 castellated nickel plated brass nut U6915 + 1 silicone flat seal + 1 hex nut 19 mm (.748) across flats U4116.
- IZN : 1 castellated nickel plated brass nut U6915 + 1 O-ring

Packaging unit : 25 pieces for flying lead models - 40 pieces for other models

IZ series

Rear mounted sealed pushbutton switches - bushing Ø 16 mm - metal - momentary

For variable panel thickness : IZM

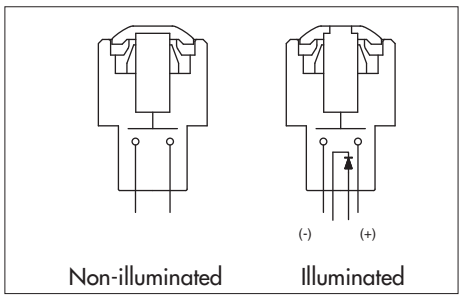

- Five LED colours
- Tin plated LED terminals
- Gold plated contacts

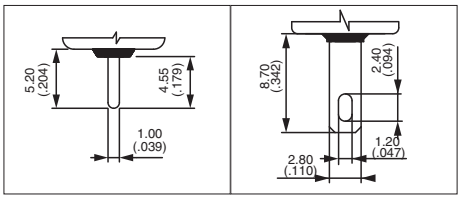

MODEL STRUCTURE

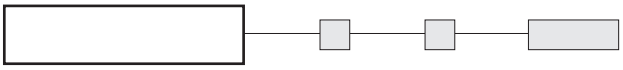

Plunger marking available on IZMP models (symbol 10 mm max.). On request.

Illuminated - solder lug terminals

Curved actuator **IZMR3S4** Normally Open

Flat actuator **IZMP3S4** Normally Open

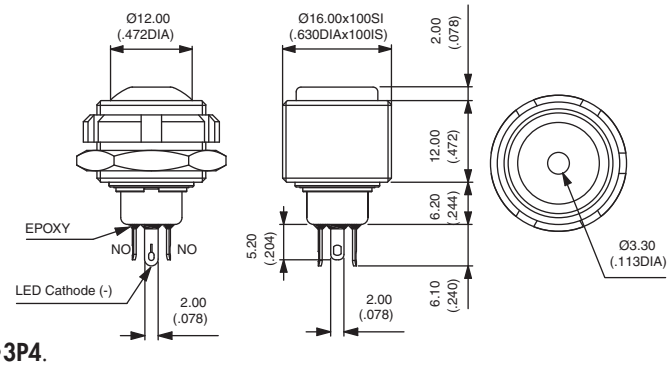

Also available with straight PC terminals : **IZM•3P4**.
LED colour is indicated by the bottom of the switch.

Illuminated - flying lead terminals

Curved actuator **IZMR3F4** Normally Open

Flat actuator **IZMP3F4** Normally Open

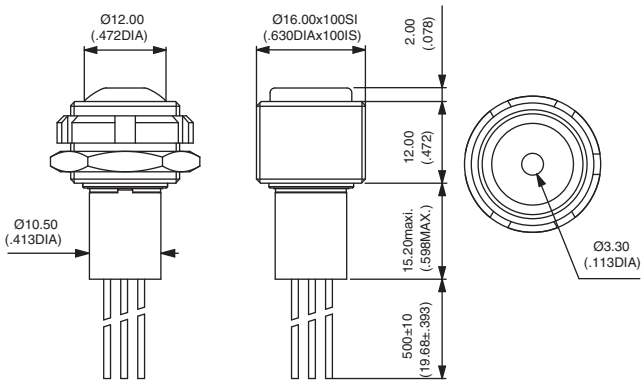

Wire colours : black : NO contact,
red : LED anode (+), blue : LED cathode (-)

Non-illuminated - solder lug terminals

Curved actuator **IZMR3S4** Normally Open

Flat actuator **IZMP3S4** Normally Open

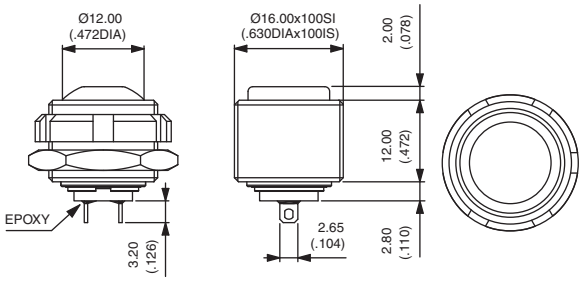

Also available with straight PC terminals :
IZM•3P4 and quick-connect terminals : **IZM•3Z4**.

For non-illuminated FLYING LEAD versions, refer to illuminated models above. Non-illuminated have 2 wires only.

IZ series

Rear mounted sealed pushbutton switches - bushing Ø 16 mm - metal - momentary

For fixed panel thickness : IZN

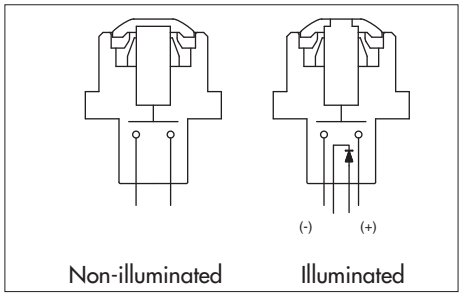

- Five LED colours
- Tin plated LED terminals

Solder lug **S**

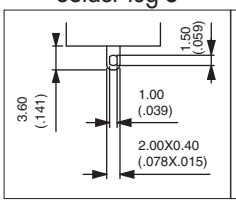

Straight **P**

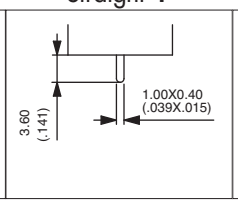

Quick-connect Z

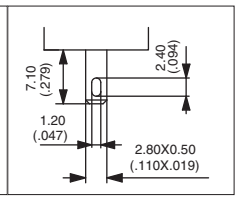

MODEL STRUCTURE

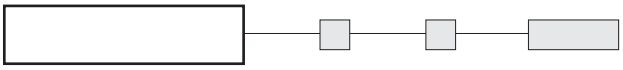

Plunger marking available on IZNP models (symbol 10 mm max.). On request.

Illuminated - solder lug terminals

GOLD PLATED CONTACTS

Curved actuator
IZNR3S4 Normally Open

Flat actuator
IZNP3S4 Normally Open

Also available with straight PC terminals : **IZN•3P4**.
LED colour is indicated by the bottom of the switch.

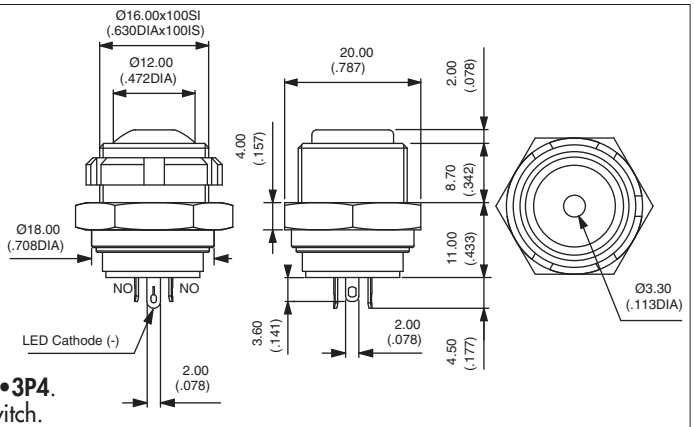

Illuminated - sealed flying lead terminals

GOLD PLATED CONTACTS

Curved actuator
IZNR3F4 Normally Open

Flat actuator
IZNP3F4 Normally Open

Wire colours : black : NO contact,
red : LED anode (+), blue : LED cathode (-)

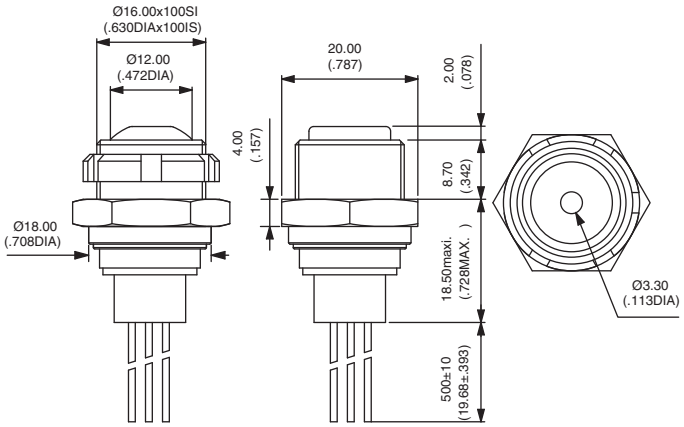

Non-illuminated - solder lug terminals

GOLD PLATED CONTACTS

Curved actuator
IZNR3S4 Normally Open

Flat actuator
IZNP3S4 Normally Open

Also available with straight PC terminals :
IZN•3P4 and quick-connect terminals : **IZN•3Z4**.

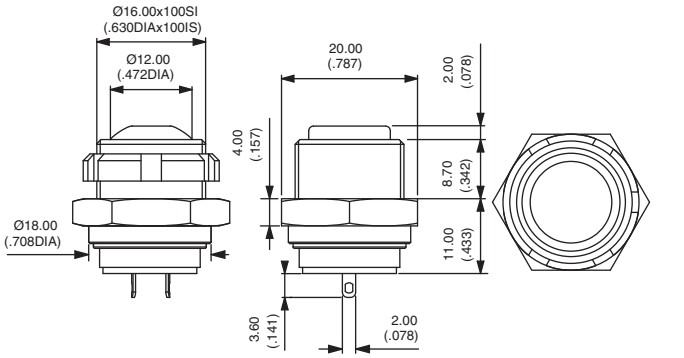

For non-illuminated FLYING LEAD versions, refer to illuminated models above. Non-illuminated have 2 wires only.

Non-illuminated - screw terminals

SILVER CONTACTS

Curved actuator
IZNR3V2 — Normally open

Flat actuator
IZNP3V2 — Normally open

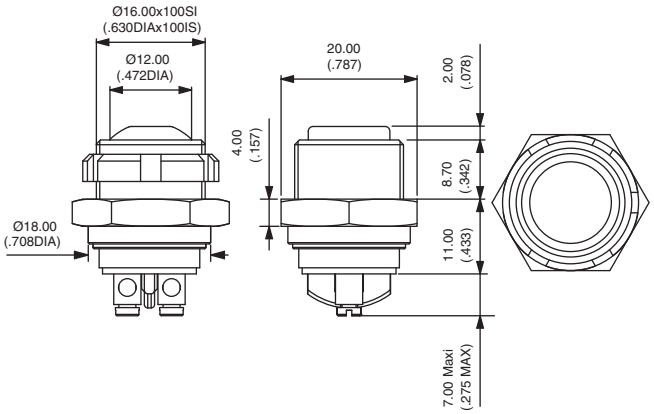

ACTUATOR COLOUR

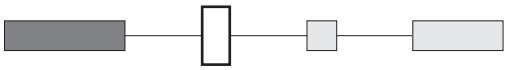

1 : blue - **B** : dark blue - **2** : black - **3** : green - **5** : yellow - **6** : red - **7** : white - **8** : bright chrome - **9** : orange
A : satin chrome

BUSHING AND BEZEL COLOUR

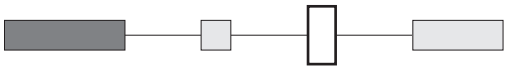

2 : black (standard)
Other : on request.

LED COLOUR

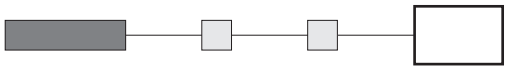

Blank : non-illuminated
L0S : super red - **L0Y** : yellow - **L0G** : green
L0B : blue - **L0W** : white

ERMEC
www.ermec.com
Distribución de componentes
eléctricos y electrónicos

Tel.: (+34) 902 450 160
Fax: (+34) 902 433 088
ermec@ermec.com
www.ermec.com

IZ series

Rear mounted sealed pushbutton switches - bushing Ø 16 mm - metal - latching

Distinctive features and specifications

- ❑ **Rear mounting for easier installation**
- ❑ **Latching action metal models**
- ❑ **Fixed or variable panel thickness**
- ❑ **Sealed to IP67**
- ❑ **Illuminated or non-illuminated**
- ❑ **Flat actuator for optional marking**

ENVIRONMENTAL SPECIFICATIONS

- Front panel sealing : IP67 according to IEC 60529
- Shock resistance : 100 g according to IEC 512-4, test 6c
- Vibration resistance : 10-500Hz - 10 g according to IEC 512-4, test 6d
- Salt spray : IEC 512-6, test 11f
- Robustness (non-illuminated) : IK06 according to EN 50102 (1 joule)
- Operating temperature : -40°C to +85°C

ELECTRICAL SPECIFICATIONS

- Max. current/voltage rating with resistive load : 100mA 24VDC - 200.000 cycles
- Initial contact resistance : 100 mΩ max.
- Insulation resistance : 1 GΩ min. at 500VDC
- Dielectric strength : 1.500 Vrms between terminals
  1.000 Vrms between terminals and frame

LED COMPONENT SPECIFICATIONS			
LED colour	Forward current	Typ. forward voltage	Max. forward voltage
Super red (L0S)	20mA	1,95V	1,95V
Yellow (L0Y)	20mA	2V	2,05V
Green (L0G)	20mA	3,2V	3,70V
Blue (L0B)	20mA	3,2V	4V

A resistor must be series-connected by the user.

$$\text{Resistor value} = \frac{\text{supply voltage - LED forward voltage}}{\text{LED forward current}}$$

On flying lead versions, the LED resistor can be integrated by APEM on request.

GENERAL SPECIFICATIONS

- Panel thickness :
  - IZM : 3 mm (.118) max.
  - IZN : 4 mm (.157) max.
- Total travel : 2,5 mm (.098) +/-0,3 mm
- Typical operating force : 5N +/- 2N
- Mechanical life : 200.000 cycles
- Torque : IZN : 1 Nm max.
  IZM : 0,7 Nm max. applied to nut
- Soldering : 320°C max. for 3 sec.

MATERIALS

- Case : thermoplastic UL94-V0
- Plunger : polyamide
- Bushing/bezel : brass, nickel plated
- Contacts : silver, gold plated
- Multi-wire lead AWG20, section 0,6 mm²
- LED wire : AWG26, section 0,12 mm²
- Lens : polycarbonate
- Terminal seal : epoxy

PANEL CUT-OUT

① Flat seal ② O-ring

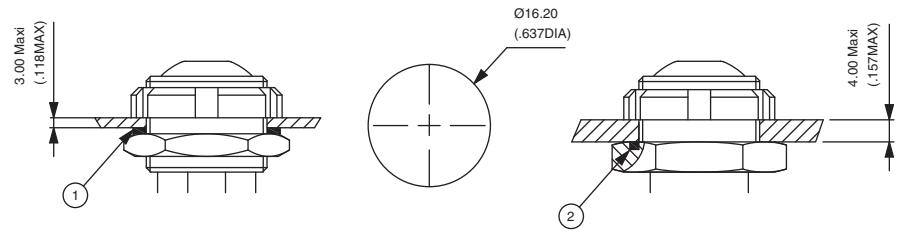

IZM (adjustable hex nut) IZN (fixed hex nut)

MATRIX MOUNTING

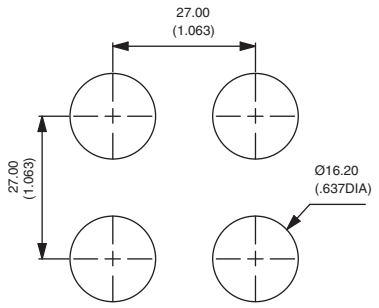

MODEL STRUCTURE

IZ

SERIES

Model

- **M** Metal, **variable** panel thickness
- **N** Metal, **fixed** panel thickness

Actuator shape

- **R** Round, curved
- **P** Round, flat

Electrical function

- **1** OFF - ON

Terminals

- **S** Solder lugs
- **F** Flying leads
- **P** Straight PC
- **Z** Quick-connect

Contacts

- **4** Silver, gold plated

OPTIONS

Actuator colour

- **1** Blue
- **B** Dark blue
- **2** Black
- **3** Green
- **5** Yellow
- **6** Red
- **7** White
- **8** Bright chrome
- **9** Orange
- **A** Satin chrome

Bushing & bezel finish

- **N** Nickel plated (standard)

Other : on request.

LED colour

- **Blank** Non-illum.
- **L0S** Super red
- **L0Y** Yellow
- **L0G** Green
- **L0B** Blue

ABOUT THIS SERIES

On the following pages, you will find successively :
model structure of switches and options in the same order as in above chart

Dimensions : first dimensions are in mm while inches are shown as bracketted numbers.

NOTICE : please note that not all combinations of above numbers are available.
Refer to the following pages for further information.

Mounting accessories : Standard hardware supplied :
- IZN : 1 castellated nickel plated brass nut U6915 + 1 O-ring
- IZM : 1 castellated nickel plated brass nut U6915 + 1 silicone flat seal + 1 hex nut 19 mm (.748) across flats U4116.

Packaging unit : 25 pieces for flying lead models - 40 pieces for other models

IZ series

Rear mounted sealed pushbutton switches - bushing Ø 16 mm - metal - latching

For variable panel thickness : IZM

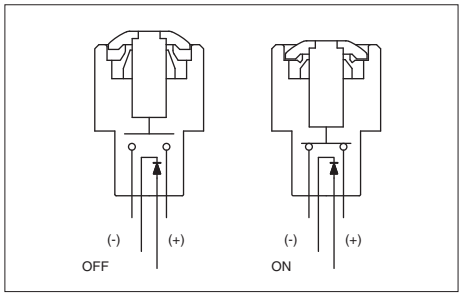

- Four LED colours
- Tin plated LED terminals
- Gold plated contacts

Solder lug **S**

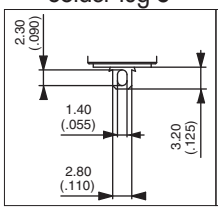

Straight **P**

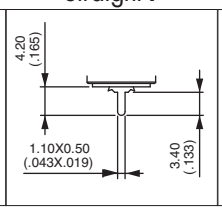

Quick-connect **Z**

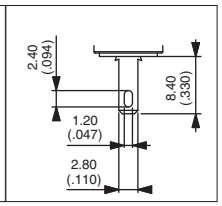

MODEL STRUCTURE

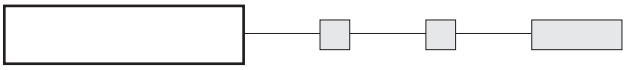

Plunger marking available on IZMP models (symbol 10 mm max.). On request.

Illuminated - solder lug terminals

Curved actuator
IZMR1S4 OFF - ON

Flat actuator
IZMP1S4 OFF - ON

Also available with straight PC terminals :
IZM•1P4 & quick-connect terminals : **IZM•1Z4**.

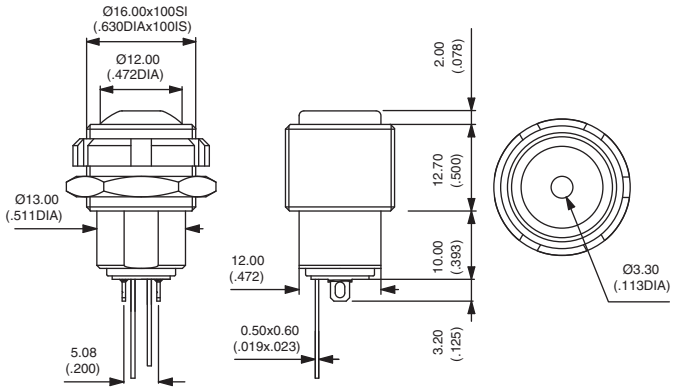

Illuminated - flying lead terminals

Curved actuator
IZMR1F4 OFF - ON

Flat actuator
IZMP1F4 OFF - ON

Wire colours : black : contact,
red : LED anode(+), blue : LED cathode (-)

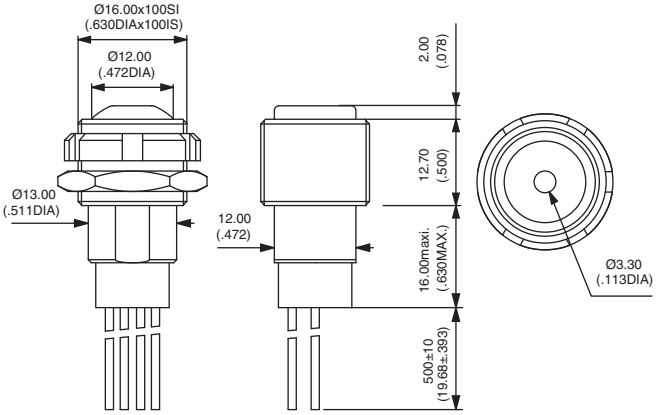

Non-illuminated - solder lug terminals

Curved actuator
IZMR1S4 OFF - ON

Flat actuator
IZMP1S4 OFF - ON

Also available with straight PC terminals :
IZM•1P4 & quick-connect terminals : **IZM•1Z4**.

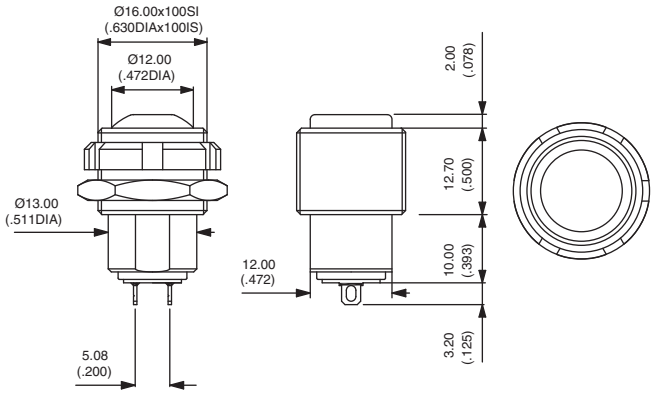

For FLYING LEAD versions, refer to illuminated models above. Non-illuminated have 2 wires only.

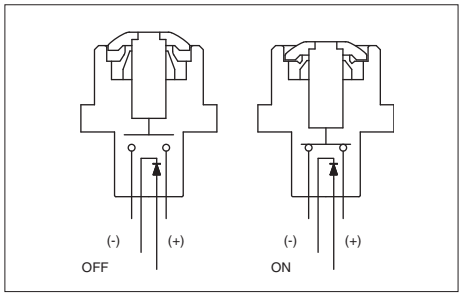

- Four LED colours
- Tin plated LED terminals
- Gold plated contacts

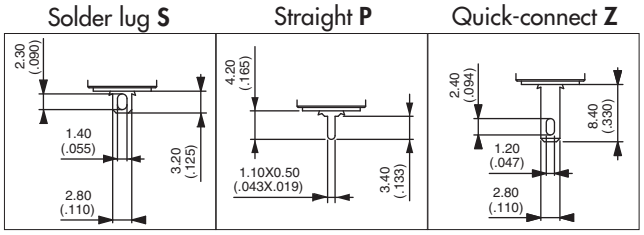

MODEL STRUCTURE

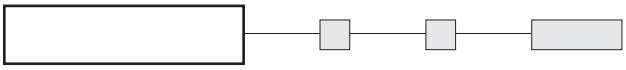

Plunger marking available on IZNP models (symbol 10 mm max.). On request.

Illuminated - solder lug terminals

Curved actuator
IZNR1S4 OFF - ON

Flat actuator
IZNP1S4 OFF - ON

Also available with straight PC terminals : **IZN•1P4** & quick-connect terminals : **IZN•1Z4**.

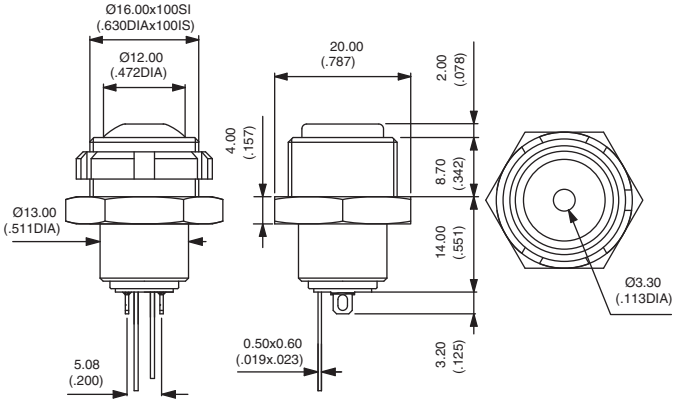

Illuminated - flying lead terminals

Curved actuator
IZNR1F4 OFF - ON

Flat actuator
IZNP1F4 OFF - ON

Wire colours : black : contact,
red : LED anode(+), blue : LED cathode (-)

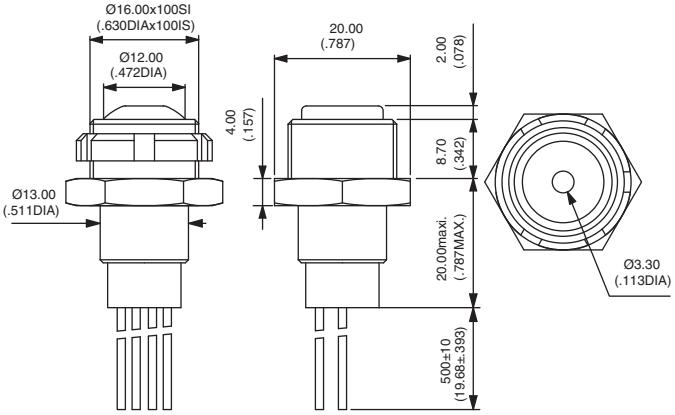

Non-illuminated - solder lug terminals

Curved actuator
IZNR1S4 OFF - ON

Flat actuator
IZNP1S4 OFF - ON

Also available with straight PC terminals : **IZN•1P4** & quick-connect terminals : **IZN•1Z4**.

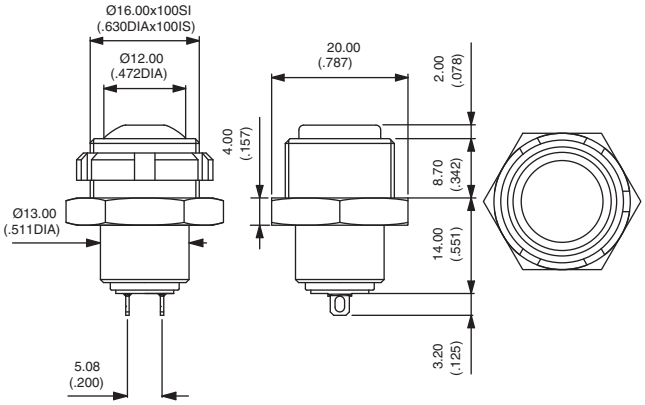

For FLYING LEAD versions, refer to illuminated models above. Non-illuminated have 2 wires only.

ACTUATOR COLOUR

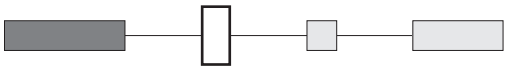

1 : blue - **B** : dark blue - **2** : black - **3** : green - **5** : yellow - **6** : red - **7** : white - **8** : bright chrome - **9** : orange
A : satin chrome

BUSHING AND BEZEL COLOUR

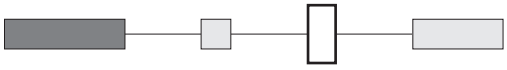

N : nickel plated (standard)
Other : on request.

LED COLOUR

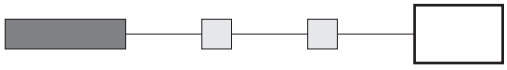

Blank : non-illuminated
L0S : super red - **L0Y** : yellow - **L0G** : green
L0B : blue

ERMEC
www.ermec.com
Distribución de componentes
eléctricos y electrónicos

Tel.: (+34) 902 450 160
Fax: (+34) 902 433 088
ermec@ermec.com
www.ermec.com

IZ series

Rear mounted sealed pushbutton switches - bushing Ø 16 mm - momentary

Distinctive features and specifications

- ❑ **Rear mounting for easier installation**
- ❑ **Momentary models**
- ❑ **Screw version available up to 4A**
- ❑ **Sealed to IP67**
- ❑ **Illuminated or non-illuminated**
- ❑ **Flat actuator for optional marking**

ENVIRONMENTAL SPECIFICATIONS

- Front panel sealing : IP67 according to IEC 60529
- Shock resistance : 100 g according to IEC 512-4, test 6c
- Vibration resistance : 10-500Hz - 10 g according to IEC 512-4, test 6d
- Salt spray : IEC 512-6, test 11f
- Operating temperature : -40°C to +85°C

GENERAL SPECIFICATIONS

- Panel thickness : 3 mm (.118) max.
- Total travel : 1,8 mm (.070) +/- 0,3 mm
- Typical operating force : 6N +/- 2N
- Mechanical life : 1.000.000 cycles
- Torque : 0,7 Nm max. applied to nut
- Soldering : 320°C max. for 3 sec.

ELECTRICAL SPECIFICATIONS

- Max. current/voltage rating with resistive load :
  - Gold plated silver contacts (code 4) : 200mA 48VDC - 200mA 250VAC
  - Silver contacts (code 2) - screw terminals : 2A 250VAC - 4A 48VDC
- Electrical life at full load : 500.000 cycles
- Initial contact resistance : 100 mΩ max.
- Insulation resistance : 1 GΩ min. at 500VDC
- Dielectric strength : 1.000 Vrms 50 Hz

LED COMPONENT SPECIFICATIONS

LED colour	Forward current	Typ. forward voltage	Max. forward voltage
Super red (L0S)	20mA	2,1V	2,3V
Yellow (L0Y)	20mA	2,1V	2,3V
Green (L0G)	20mA	2,1V	2,3V
Blue (L0B)	20mA	3,2V	3,8V
White (L0W)	20mA	3,35V	4,25V

A resistor must be series-connected by the user.

$$\text{Resistor value} = \frac{\text{supply voltage - LED forward voltage}}{\text{LED forward current}}$$

On flying lead versions, the LED resistor can be integrated by APEM on request.

MATERIALS

- Case : thermoplastic UL94-V0
- Plunger : polyamide
- Bushing/bezel : polyamide
- Contacts :
  4 : silver, gold plated
  2 : silver (screw terminals)
- Multi-wire lead AWG20, section 0,6 mm²
- LED wire : AWG26, section 0,12 mm²
- Lens : polycarbonate
- Terminal seal : epoxy

PANEL CUT-OUT

① Flat seal

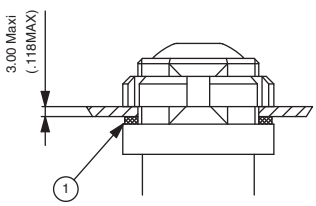

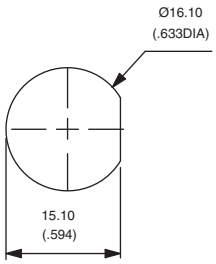

MATRIX MOUNTING

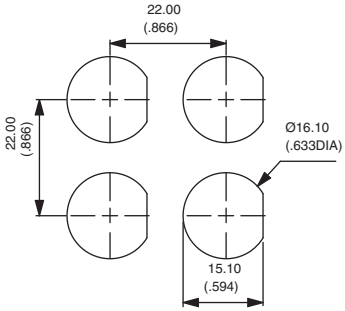

IZ series

Rear mounted sealed pushbutton switches - bushing Ø 16 mm - momentary

Overview

MODEL STRUCTURE

IZ					

SERIES

Model

P	Plastic

Actuator shape

R	Round, curved
P	Round, flat

Electrical function

3	Normally open (NO)

Terminals

S	Solder lugs
F	Flying leads
P	Straight PC
Z	Quick-connect (non-illuminated)
V	Screw (non-illuminated)

Contacts

4	Silver, gold plated
2	Silver (screw term.)

OPTIONS

Actuator colour

1	Blue
B	Dark blue
2	Black
3	Green
5	Yellow
6	Red
7	White
8	Bright chrome
9	Orange
A	Satin chrome

Bushing & bezel finish

2	Black (standard)

Other : on request.

LED colour

Blank	Non-illum.
L0S	Super red
L0Y	Yellow
L0G	Green
L0B	Blue
L0W	White

ABOUT THIS SERIES
On the following pages, you will find successively :
model structure of switches and options in the same order as in above chart

Dimensions : first dimensions are in mm while inches are shown as bracketted numbers.

NOTICE : please note that not all combinations of above numbers are available.
Refer to the following pages for further information.

Mounting accessories : Standard hardware supplied : 1 castellated black plastic nut U4249 and 1 silicone flat seal.

Packaging unit : 25 pieces for flying lead models - 40 pieces for other models

ERMEC
www.ermec.com
Distribución de componentes eléctricos y electrónicos
Tel.: (+34) 902 450 160
Fax: (+34) 902 433 088
ermec@ermec.com
www.ermec.com

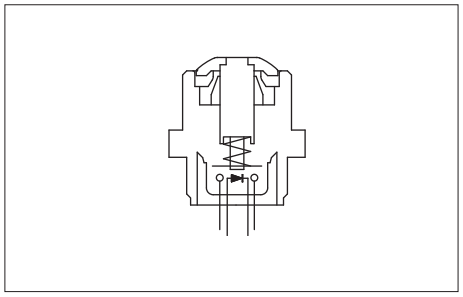

- Five LED colours
- Tin plated LED terminals
- Gold plated contacts

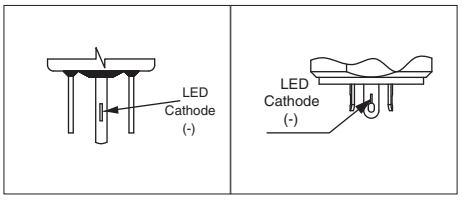

MODEL STRUCTURE

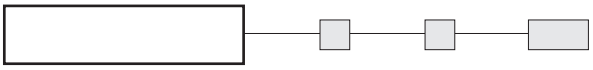

Plunger marking available on IZPP models (symbol 10 mm max.). On request.

Solder lug terminals

Curved actuator **IZPR3S4** Normally Open

Flat actuator **IZPP3S4** Normally Open

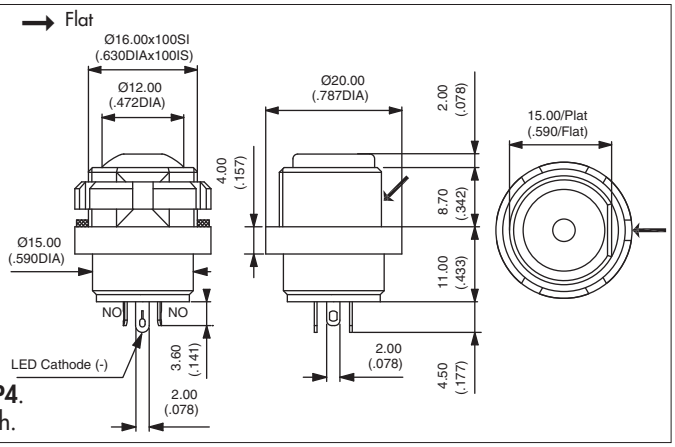

Also available with straight PC terminals : **IZP•3P4**.
LED colour is indicated by the bottom of the switch.

Flying lead terminals - momentary

Curved actuator **IZPR3F4** Normally Open

Flat actuator **IZPP3F4** Normally Open

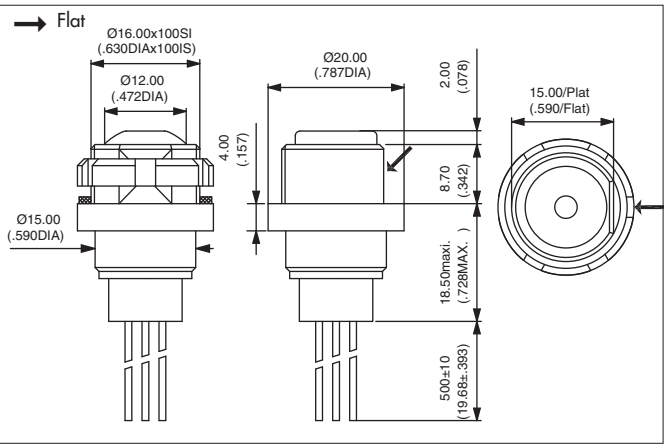

Wire colours : black : NO contact,
red : LED anode(+), blue : LED cathode (-)

ACTUATOR COLOUR

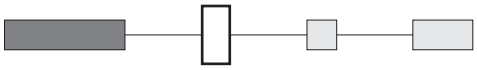

1 : blue - **B** : dark blue - **2** : black - **3** : green - **5** : yellow - **6** : red - **7** : white - **8** : bright chrome - **9** : orange
A : satin chrome

BUSHING AND BEZEL COLOUR

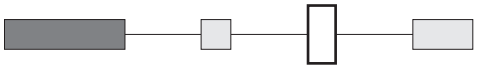

2 : black (standard)
Other : on request.

LED COLOUR

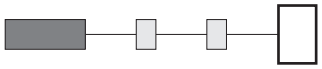

L0S : super red - **L0Y** : yellow - **L0G** : green
L0B : blue - **L0W** : white

IZ series

Rear mounted sealed pushbutton switches - bushing Ø 16 mm - momentary

Non-illuminated

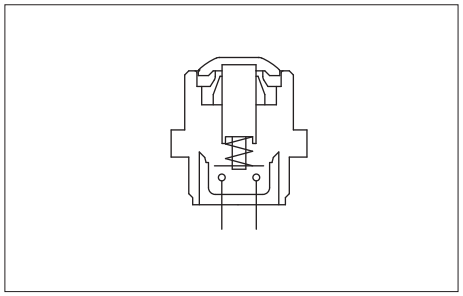

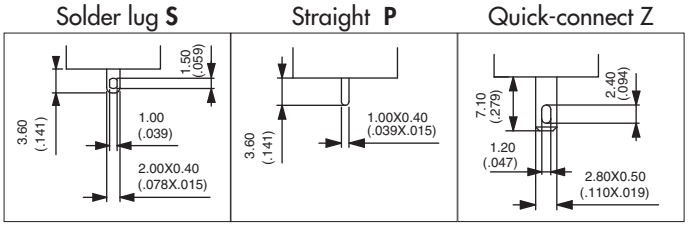

MODEL STRUCTURE

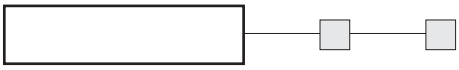

Plunger marking available on IZPP models (symbol 12 mm max.). On request.

Solder lug terminals - gold plated contacts

Curved actuator
IZPR3S4 — Normally Open

Flat actuator
IZPP3S4 — Normally Open

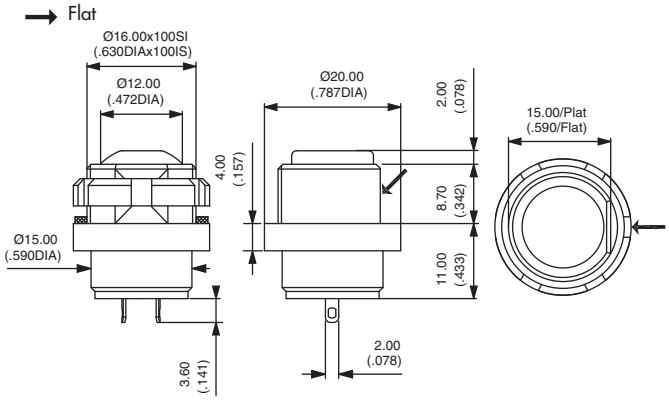

Also available with straight PC terminals :
IZP•3P4 and quick-connect terminals : **IZP•3Z4**.

Sealed flying lead terminals - gold plated contacts

Curved actuator
IZPR3F4 — Normally Open

Flat actuator
IZPP3F4 — Normally Open

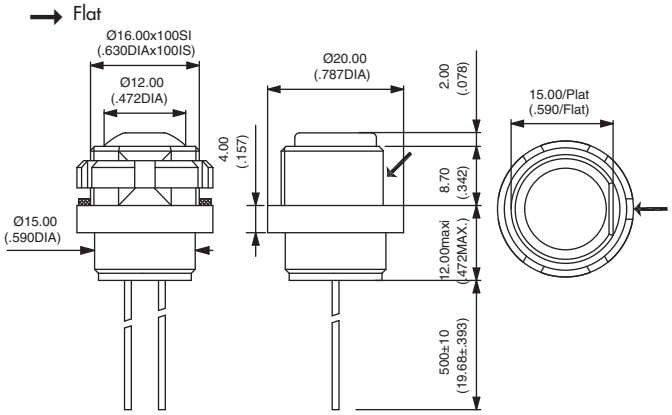

Screw terminals - silver contacts

Curved actuator
IZPR3V2 — Normally open

Flat actuator
IZPP3V2 — Normally open

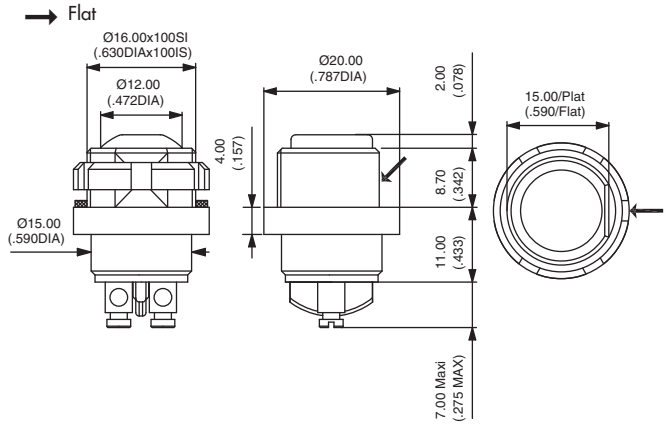

Actuator colour and bushing/bezel colour : select the desired codes on previous page.

- ❑ **Rear mounting for easier installation**
- ❑ **Latching action models**
- ❑ **Sealed to IP67**
- ❑ **Illuminated or non-illuminated**
- ❑ **Flat actuator for optional marking**

ENVIRONMENTAL SPECIFICATIONS

- Front panel sealing : IP67 according to IEC 60529
- Shock resistance : 100 g according to IEC 512-4, test 6c
- Vibration resistance : 10-500Hz - 10 g according to IEC 512-4, test 6d
- Salt spray : IEC 512-6, test 11f
- Operating temperature : -40°C to +85°C

GENERAL SPECIFICATIONS

- Panel thickness : 3 mm (.118) max.
- Total travel : 2,5 mm (.098) +/- 0,3 mm
- Typical operating force : 5N +/- 2N
- Mechanical life : 200.000 cycles
- Torque : 0,7 Nm max. applied to nut
- Soldering : 320°C max. for 3 sec.

ELECTRICAL SPECIFICATIONS

- Max. current/voltage rating with resistive load : 100mA 24VDC - 200.000 cycles
- Initial contact resistance : 100 mΩ max.
- Insulation resistance : 1 GΩ min. at 500VDC
- Dielectric strength : 1.500 Vrms between terminals

LED COMPONENT SPECIFICATIONS

LED colour	Forward current	Typ. forward voltage	Max. forward voltage
Super red (L0S)	20mA	1,95V	1,95V
Yellow (L0Y)	20mA	2V	2,05V
Green (L0G)	20mA	3,2V	3,70V
Blue (L0B)	20mA	3,2V	4V

A resistor must be series-connected by the user.

$$\text{Resistor value} = \frac{\text{supply voltage - LED forward voltage}}{\text{LED forward current}}$$

On flying lead versions, the LED resistor can be integrated by APEM on request.

MATERIALS

- Case : thermoplastic UL94-V0
- Plunger : polyamide
- Bushing/bezel : polyamide
- Contacts : silver, gold plated
- Multi-wire lead AWG20, section 0,6 mm²
- LED wire : AWG26, section 0,12 mm²
- Lens : polycarbonate
- Terminal seal : epoxy

PANEL CUT-OUT

① Flat seal

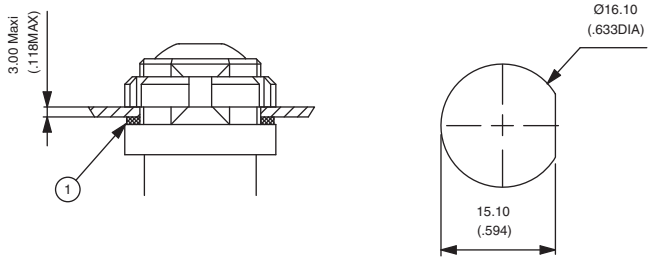

MATRIX MOUNTING

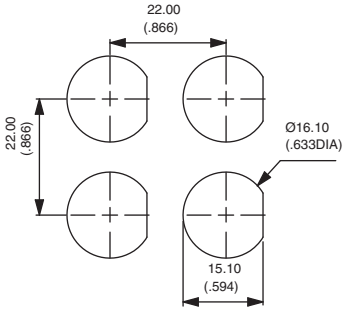

IZ series

Rear mounted sealed pushbutton switches - bushing Ø 16 mm - latching

Distinctive features and specifications

MODEL STRUCTURE

IZ					
SERIES	Model	Actuator shape	Electrical function	Terminals	Contacts

Model

P	Plastic

Actuator shape

R	Round, curved
P	Round, flat

Electrical function

1	ON - OFF

Terminals

S	Solder lugs
F	Flying leads
P	Straight PC
Z	Quick-connect

Contacts

4	Silver, gold plated

OPTIONS

Actuator colour

1	Blue
B	Dark blue
2	Black
3	Green
5	Yellow
6	Red
7	White
8	Bright chrome
9	Orange
A	Satin chrome

Bushing & bezel finish

2	Black (standard)

Other : on request.

LED colour

Blank	Non-illum.
L0S	Super red
L0Y	Yellow
L0G	Green
L0B	Blue

ABOUT THIS SERIES
On the following pages, you will find successively :
model structure of switches and options in the same order as in above chart

Dimensions : first dimensions are in mm while inches are shown as bracketted numbers.

NOTICE : please note that not all combinations of above numbers are available.
Refer to the following pages for further information.

Mounting accessories : Standard hardware supplied : 1 castellated black plastic nut U4249 and 1 silicone flat seal.

Packaging unit : 25 pieces for flying lead models - 40 pieces for other models

ERMEC
www.ermec.com
Distribución de componentes
eléctricos y electrónicos
Tel.: (+34) 902 450 160
Fax: (+34) 902 433 088
ermec@ermec.com
www.ermec.com

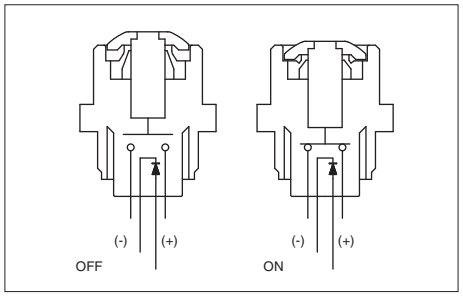

- Four LED colours
- Tin plated LED terminals
- Gold plated contacts

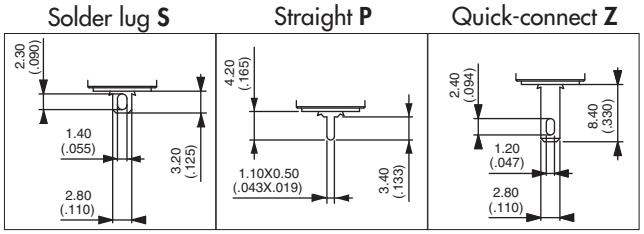

MODEL STRUCTURE

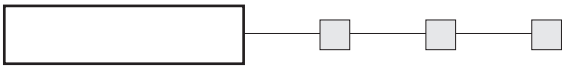

Plunger marking available on IZPP models (symbol 10 mm max.). On request.

Solder lug terminals

Curved actuator
IZPR1S4 ON - OFF

Flat actuator
IZPP1S4 ON - OFF

Also available with straight PC terminals : **IZP•1P4** and quick-connect terminals : **IZP•1Z4**.

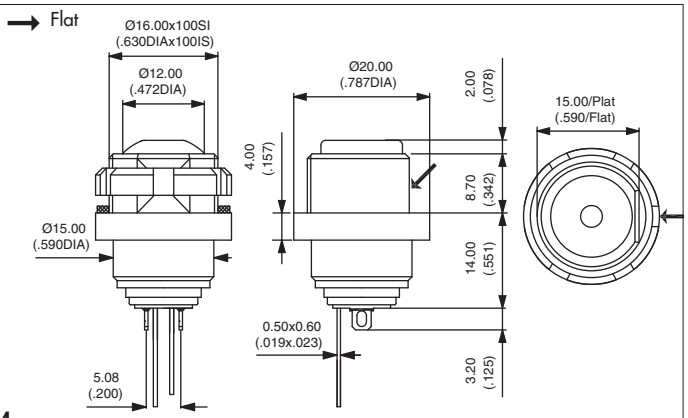

Sealed flying lead terminals

Curved actuator
IZPR1F4 ON - OFF

Flat actuator
IZPP1F4 ON - OFF

Wire colours : black : NO contact,
red : LED anode(+), blue : LED cathode (-)

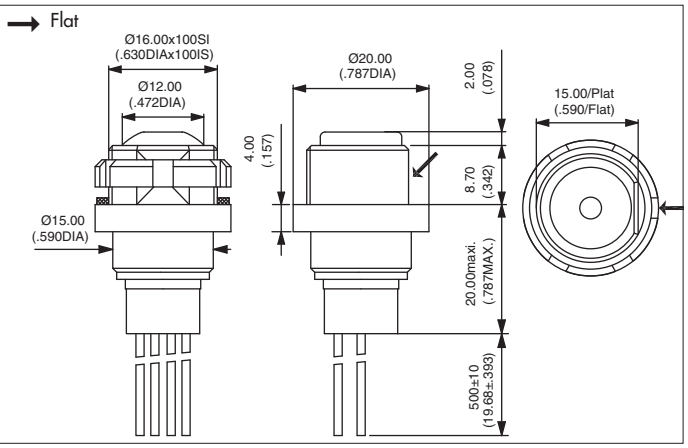

ACTUATOR COLOUR

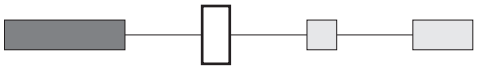

1 : blue - **B** : dark blue - **2** : black - **3** : green - **5** : yellow - **6** : red - **7** : white - **8** : bright chrome - **9** : orange
A : satin chrome

BUSHING AND BEZEL COLOUR

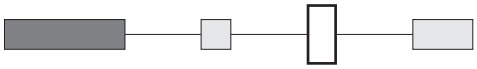

2 : black (standard)
Other : on request.

LED COLOUR

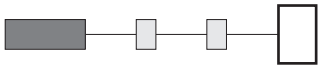

L0S : super red - **L0Y** : yellow - **L0G** : green
L0B : blue

IZ series

Rear mounted sealed pushbutton switches - bushing Ø 16 mm - latching

Non-illuminated

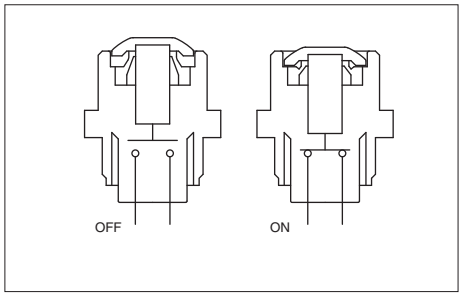

• Gold plated contacts

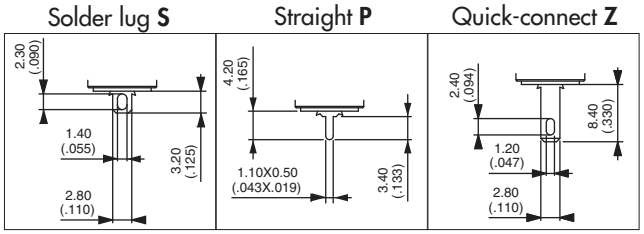

MODEL STRUCTURE

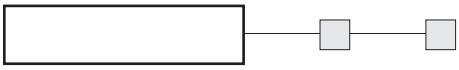

Plunger marking available on IZPP models (symbol 10 mm max.). On request.

Solder lug terminals

Curved actuator
IZPR1S4 ON - OFF

Flat actuator
IZPP1S4 ON - OFF

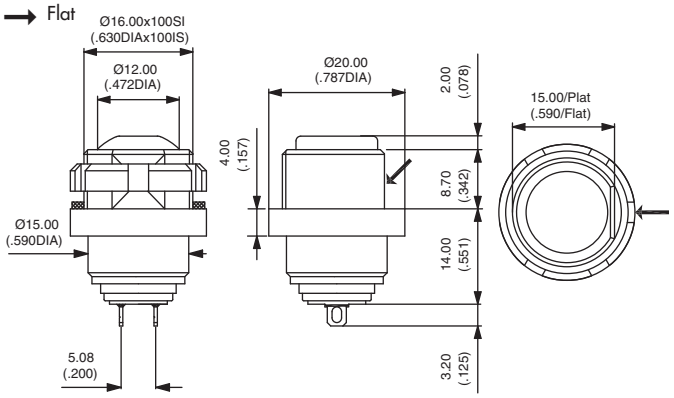

Also available with straight PC terminals : **IZP•1P4** and quick-connect terminals : **IZP•1Z4**.

Sealed flying lead terminals

Curved actuator
IZPR1F4 ON - OFF

Flat actuator
IZPP1F4 ON - OFF

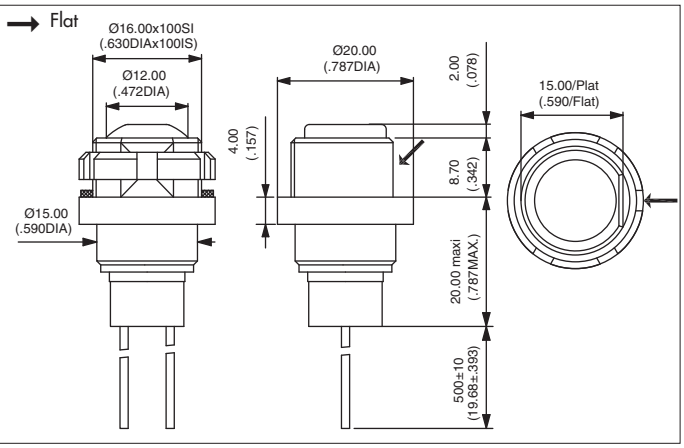

ACTUATOR COLOUR

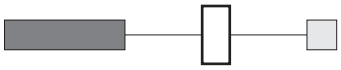

1 : blue - **B** : dark blue - **2** : black - **3** : green - **5** : yellow - **6** : red - **7** : white - **8** : bright chrome - **9** : orange
A : satin chrome

BUSHING AND BEZEL COLOUR

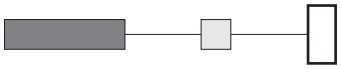

2 : black (standard)
Other : on request.

ERMEC
www.ermec.com
Distribución de componentes eléctricos y electrónicos
Tel.: (+34) 902 450 160
Fax: (+34) 902 433 088
ermec@ermec.com
www.ermec.com

ERMEC
www.ermec.com
Distribución de componentes eléctricos y electrónicos
Tel.: (+34) 902 450 160
Fax: (+34) 902 433 088
ermec@ermec.com
www.ermec.com

IR series

Sealed pushbutton switches - bushing Ø 16 mm - momentary

Distinctive features

The IR series is a range of sealed momentary pushbutton switches with dia. 16 mm bushing. This series is divided into 2 families : standard models and microswitch technology models.

Common features

- **Sealed to IP67**
- **Illuminated or non-illuminated**
- **Tactile feedback**
- **Square or round actuator**
- **Wide choice of bezel and actuator colours**
- **Wide choice of illumination colours**

Standard versions

- Numerous terminal options : solder, flying lead, straight PC, quick-connect, screw
- Screw versions withstanding up to 4A
- Electrical function : NO (2 terminals)

NO - Screw terminals

NO - Illuminated Wire lead terminals

NO - Solder lug terminals

Microswitch versions

- Withstanding up to 5A
- Two electrical functions :
  NC+NO (3 terminals)
  NC/NO combined (4 terminals)

NC+NO - 3 terminals

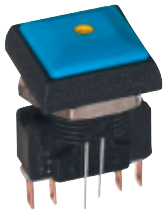

NC/NO - 4 terminals - Illuminated

Optional marking

Actuator marking is available on request for models with flat round actuator.

Standard version

Microswitch version

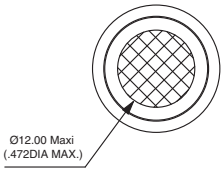

Integrated resistor

On wire lead illuminated versions, the LED resistor can be integrated in the product by APEM. On request.

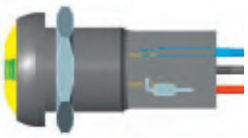

IR series

Sealed pushbutton switches - bushing Ø 16 mm - momentary - standard version

Distinctive features and specifications

- ❑ **Screw version up to 4A**
- ❑ **Tactile feedback**
- ❑ **Sealed to IP67**
- ❑ **Illuminated or non-illuminated**
- ❑ **Flat round actuator for optional marking**

ENVIRONMENTAL SPECIFICATIONS

- Front panel sealing : IP67 according to IEC 60529
- Shock resistance : 100 g according to IEC 512-4, test 6c
- Vibration resistance : 10-500Hz - 10 g according to IEC 512-4, test 6d
- Salt spray : IEC 512-6, test 11f
- Operating temperature : -40°C to +85°C

GENERAL SPECIFICATIONS

- Panel thickness : 8 mm (.314) max.
- Total travel : 1,6 mm (.062) +/- 0,3 mm
- Typical operating force : 4N +/- 2N
- Mechanical life : 1.000.000 cycles
- Torque : 0,8 Nm max. applied to nut
- Soldering : 320°C max. for 3 sec.

ELECTRICAL SPECIFICATIONS

- Max. current/voltage rating with resistive load :
  - Gold plated silver contacts (code 4) : 200mA 48VDC - 200mA 250VAC
  - Silver contacts (code 2) - screw terminals : 2A 250VAC - 4A 48VDC
- Electrical life at full load : 500.000 cycles
- Initial contact resistance : 100 mΩ max.
- Insulation resistance : 1 GΩ min. at 500VDC
- Dielectric strength : 1.500 Vrms

LED COMPONENT SPECIFICATIONS

LED colour	Forward current	Typ. forward voltage	Max. forward voltage
Super red (L0S)	20mA	2,1V	2,3V
Yellow (L0Y)	20mA	2,1V	2,3V
Green (L0G)	20mA	2,1V	2,3V
Blue (L0B)	20mA	3,2V	3,8V
White (L0W)	20mA	3,35V	4,25V

A resistor must be series-connected by the user.

$$\text{Resistor value} = \frac{\text{supply voltage - LED forward voltage}}{\text{LED forward current}}$$

On flying lead versions, the LED resistor can be integrated by APEM on request.

MATERIALS

- Case : thermoplastic UL94-V0
- Actuator : polyamide 6/6
- Bushing/bezel : polyamide 6/6
- Contacts :
  4 : silver, gold plated
  2 : silver (screw terminals)
- Multi-wire lead AWG20, section 0,6 mm²
- LED wire : AWG26, section 0,12 mm²
- Lens : polycarbonate
- Terminal seal : epoxy

PANEL CUT-OUT

① Flat seal

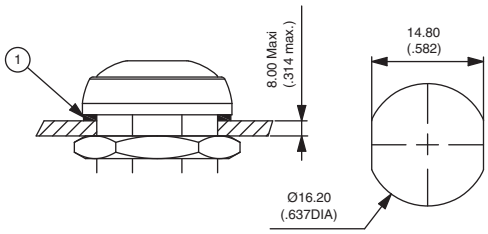

MATRIX MOUNTING

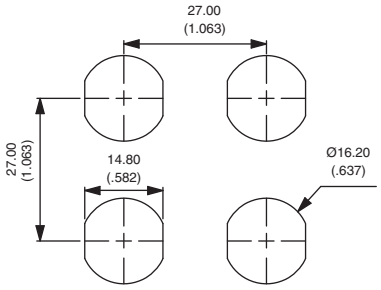

MODEL STRUCTURE

IR

SERIES

Actuator shape

- **C** Square
- **R** Round, curved
- **P** Round, flat

Electrical function

- **3** Normally open (NO)

Terminals

- **S** Solder lugs
- **F** Flying leads
- **P** Straight PC
- **Z** Quick-connect (non-illuminated)
- **V** Screw (non-illuminated)

Contacts

- **4** Silver, gold plated
- **2** Silver (screw terminals only)

OPTIONS

Actuator colour

- **1** Blue
- **B** Dark blue
- **2** Black
- **3** Green
- **5** Yellow
- **6** Red
- **7** White
- **9** Orange

Other : on request.

Bushing & bezel finish

- **2** Black (std)
- **7** White

Other : on request.

LED colour

- **Blank** Non-illum.
- **L0S** Super red
- **L0Y** Yellow
- **L0G** Green
- **L0B** Blue
- **L0W** White

ABOUT THIS SERIES

On the following pages, you will find successively :
model structure of switches and options in the same order as in above chart

NOTICE : please note that not all combinations of above numbers are available.
Refer to the following pages for further information.

Mounting accessories : Standard hardware supplied : 1 hex nut 19 mm (.748) across flats and 1 flat seal Hex nut P/N U4116.

Packaging unit : 25 pieces for flying lead models - 40 pieces for other models

ERMEC
www.ermec.com
Distribución de componentes eléctricos y electrónicos
Tel.: (+34) 902 450 160
Fax: (+34) 902 433 088
ermec@ermec.com
www.ermec.com

IR series

Sealed pushbutton switches - bushing Ø 16 mm - momentary - standard version

Round - illuminated

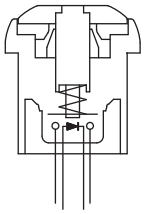

Function 3 (NO)

- Five LED colours
- Tin plated LED terminals
- Gold plated contacts

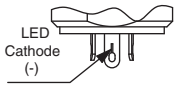

MODEL STRUCTURE

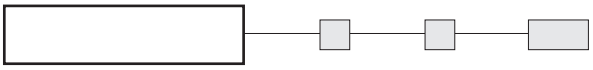

Actuator marking available on IRP models (symbol 12 mm max.). On request.

Solder lug terminals

Curved actuator **IRR3S4** Normally Open

Flat actuator **IRP3S4** Normally Open

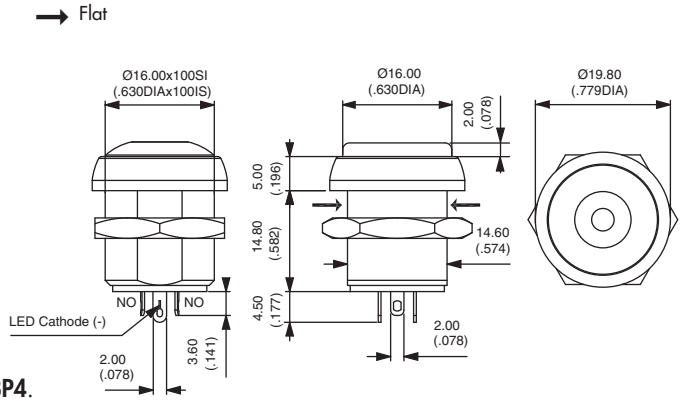

Also available with straight PC terminals : **IR•3P4**.
LED colour is indicated by the bottom of the switch.

Sealed flying lead terminals

Curved actuator **IRR3F4** Normally Open

Flat actuator **IRP3F4** Normally Open

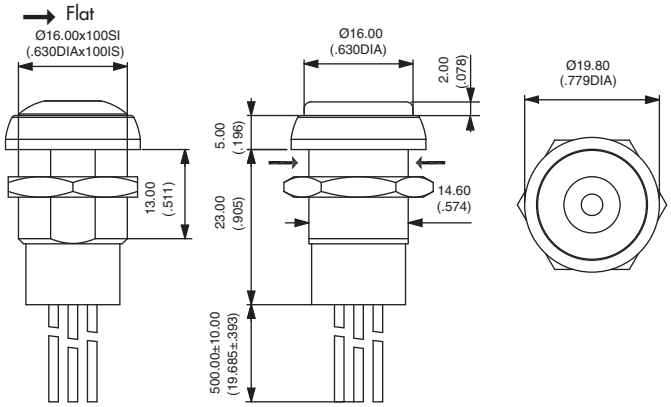

Wire colours : black : NO contact,
red : LED anode (+), blue : LED cathode (-)

ACTUATOR COLOUR

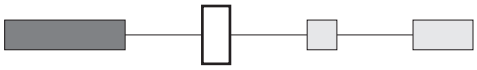

1 : blue - **B** : dark blue - **2** : black - **3** : green - **5** : yellow - **6** : red - **7** : white - **9** : orange

BUSHING AND BEZEL FINISH

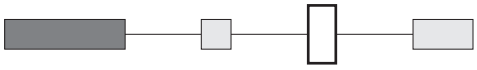

2 : black (standard) - **7** : white

LED COLOUR

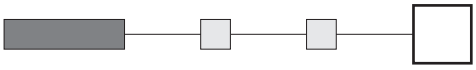

L0S : super red - **L0Y** : yellow - **L0G** : green - **L0B** : blue
L0W : white

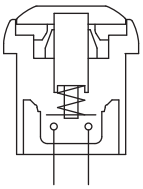

Function 3 (NO)

Straight **P**

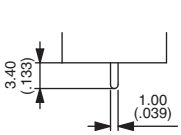

Quick-connect **Z**

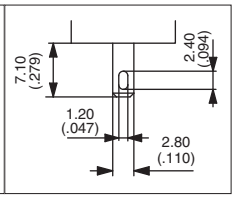

MODEL STRUCTURE

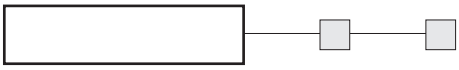

Actuator marking available on IRP models (symbol 12 mm max.). On request.

Solder lug terminals - gold plated contacts

Curved actuator
IRR3S4 — Normally open

Flat actuator
IRP3S4 — Normally open

Also available with straight PC terminals : **IR•3P4** and quick-connect terminals : **IR•3Z4**.

→ Flat

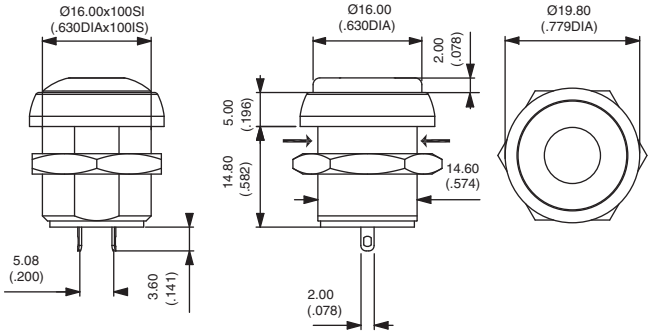

Sealed flying lead terminals - gold plated contacts

Curved actuator
IRR3F4 — Normally open

Flat actuator
IRP3F4 — Normally open

→ Flat

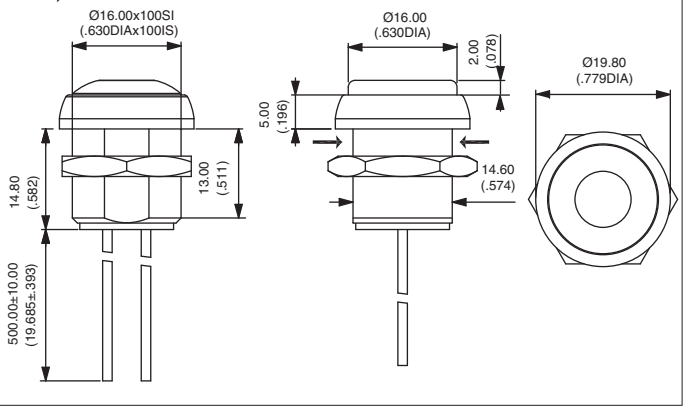

Screw terminals - silver contacts

Curved actuator
IRR3V2 — Normally open

Flat actuator
IRP3V2 — Normally open

→ Flat

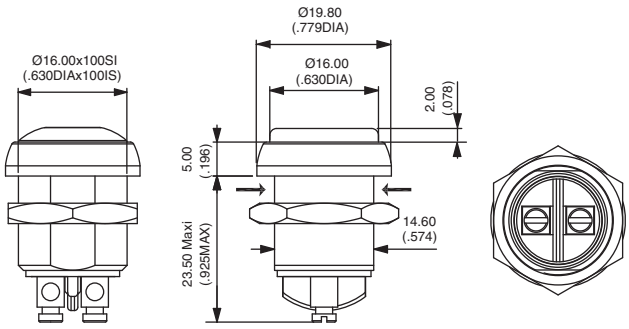

Actuator colour and bushing/bezel finish : select the desired codes on previous page.

IR series

Sealed pushbutton switches - bushing Ø 16 mm - momentary - standard version

Square - illuminated

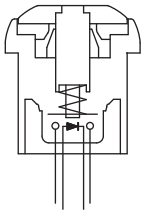

Function 3 (NO)

- Five LED colours
- Tin plated LED terminals
- Gold plated contacts

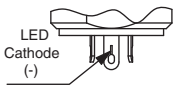

MODEL STRUCTURE

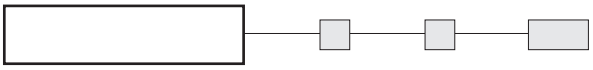

Solder lug terminals

IRC3S4

Normally Open

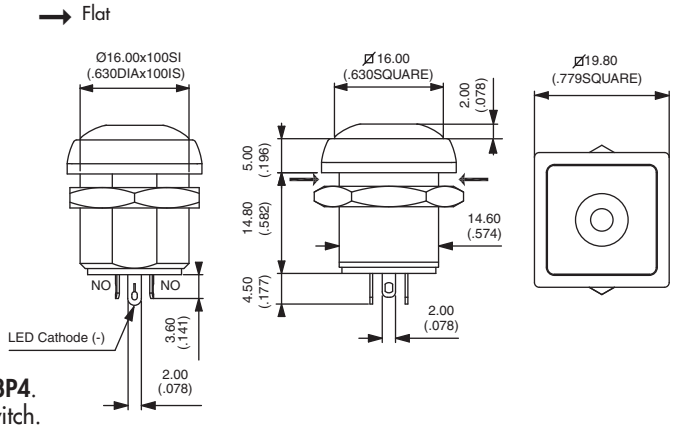

Also available with straight PC terminals : **IRC3P4**.
LED colour is indicated by the bottom of the switch.

Sealed flying lead terminals

IRC3F4

Normally Open

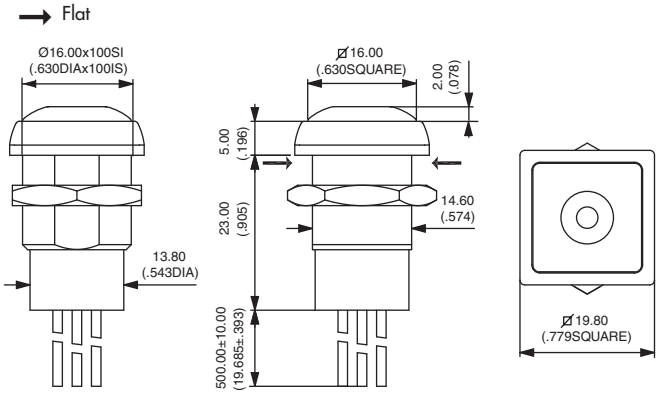

Wire colours : black : NO contact,
red : LED anode (+), blue : LED cathode (-)

ACTUATOR COLOUR

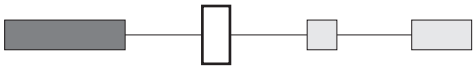

1 : blue - **B** : dark blue - **2** : black - **3** : green - **5** : yellow - **6** : red - **7** : white - **9** : orange

BUSHING AND BEZEL FINISH

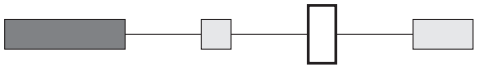

2 : black (standard) - **7** : white

LED COLOUR

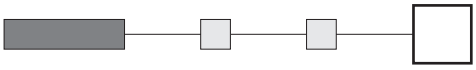

L0S : super red - **L0Y** : yellow - **L0G** : green - **L0B** : blue
L0W : white

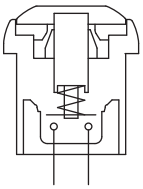

Function 3 (NO)

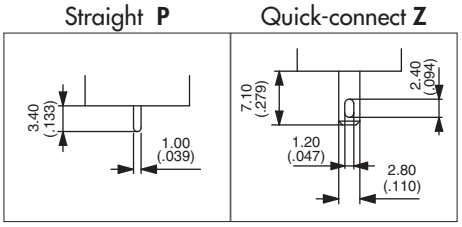

MODEL STRUCTURE

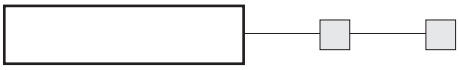

Solder lug terminals - gold plated contacts

IRC3S4 Normally Open

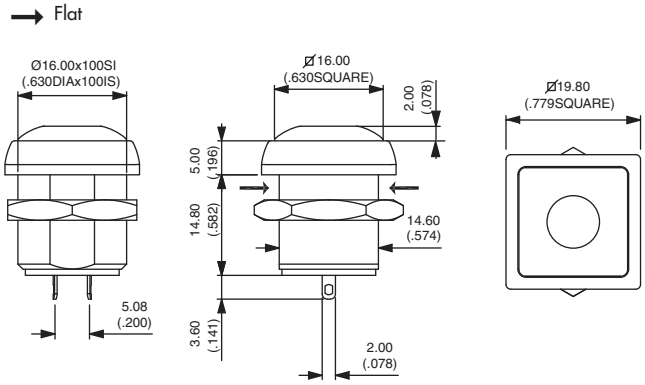

Also available with straight PC terminals : **IRC3P4** or quick-connect terminals : **IRC3Z4**.

Sealed flying lead terminals - gold plated contacts

IRC3F4 Normally Open

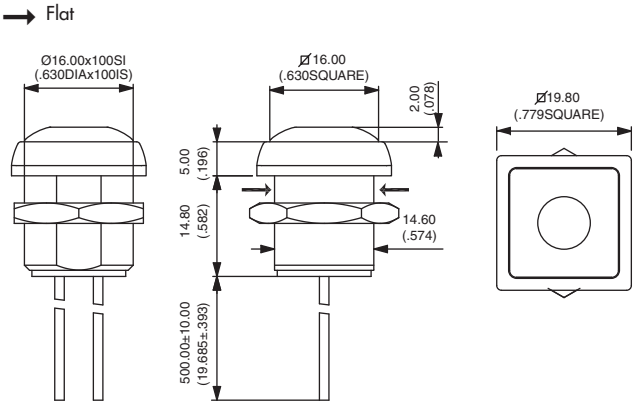

Screw terminals - silver contacts

IRC3V2 Normally Open

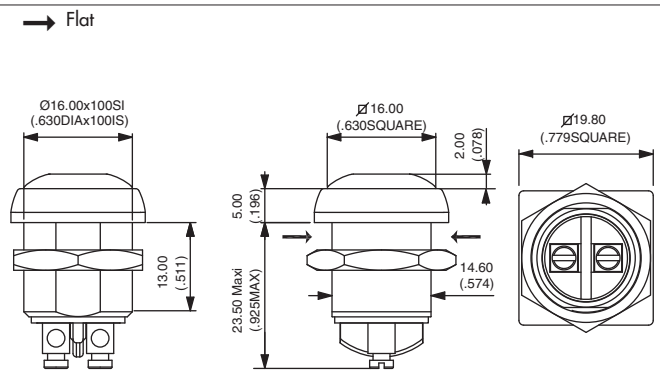

Actuator colour and bushing/bezel finish : select the desired codes on previous page.

IR series

Sealed pushbutton switches - bushing Ø 16 mm - momentary - microswitch version

Distinctive features and specifications

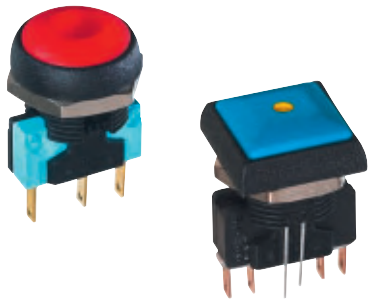

- ❑ **Microswitch technology up to 5A**
- ❑ **Tactile feedback**
- ❑ **Sealed to IP67**
- ❑ **Illuminated or non-illuminated**
- ❑ **Flat round actuator for optional marking**

ENVIRONMENTAL SPECIFICATIONS

- Front panel sealing : IP67 according to IEC 60529
- Salt spray : IEC 512-6, test 11f
- Operating temperature : -20°C to +85°C

ELECTRICAL SPECIFICATIONS

- Max. current/voltage rating with resistive load :
  5A 250VAC, 50.000 cycles (function 7)
  5A 250VAC, 25.000 cycles (function 8)
- Initial contact resistance : 100 mΩ max.
- Insulation resistance : 1 GΩ min. at 500VDC
- Dielectric strength : 750 Vrms between terminals
  2.000 Vrms between terminals and frame

LED COMPONENT SPECIFICATIONS

LED colour	Forward current	Typ. forward voltage	Max. forward voltage
Super red (L0S)	20mA	2V	2,5V
Yellow (L0Y)	20mA	2V	2,5V
Green (L0G)	10mA	2V	2,5V
Blue (L0B)	10mA	3,3V	3,8V

A resistor must be series-connected by the user.

$$\text{Resistor value} = \frac{\text{supply voltage - LED forward voltage}}{\text{LED forward current}}$$

GENERAL SPECIFICATIONS

- Panel thickness : 3 mm (.118) max.
- Total travel : 1,6 mm (.062) +/- 0,3 mm
- Typical operating force : 4N +/- 2N
- Mechanical life : 1.000.000 cycles
- Torque : 0,8 Nm max. applied to nut
- Soldering : 320°C max. for 3 sec.

MATERIALS

- Case : thermoplastic UL94-V0
- Actutor : polyamide 6/6
- Bushing/bezel : polyamide 6/6
- Contacts : silver
- Lens : polycarbonate

PANEL CUT-OUT

① Flat seal

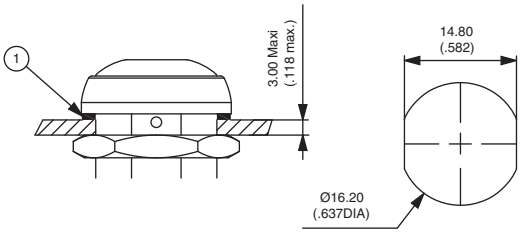

MATRIX MOUNTING

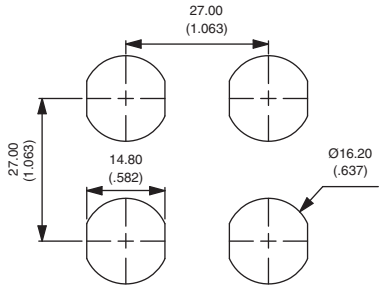

ERMEC
www.ermec.com
Distribución de componentes
eléctricos y electrónicos
Tel.: (+34) 902 450 160
Fax: (+34) 902 433 088
ermec@ermec.com
www.ermec.com

MODEL STRUCTURE

IR				
SERIES	Actuator shape	Electrical function	Terminals	Contacts

Actuator shape

- **C** Square
- **R** Round, curved
- **P** Round, flat

Electrical function

- **7** NC + NO (3 terminals)
- **8** NC/NO combined (4 terminals)

Terminals

- **Z** Solder lug or quick-connect

Contacts

- **2** Silver

OPTIONS

Actuator colour

- **1** Blue
- **B** Dark blue
- **2** Black
- **3** Green
- **5** Yellow
- **6** Red
- **7** White
- **9** Orange

Other : on request.

Bushing & bezel finish

- **2** Black (std)
- **7** White

Other : on request.

LED colour

- **Blank** Non-illum.
- **L0S** Super red
- **L0Y** Yellow
- **L0G** Green
- **L0B** Blue

The IR series for high currents is based on a microswitch. Please note that this microswitch is supplied separately.

ABOUT THIS SERIES

On the following pages, you will find successively :
model structure of switches and options in the same order as in above chart

NOTICE : please note that not all combinations of above numbers are available.
Refer to the following pages for further information.

Mounting accessories : Standard hardware supplied : 1 hex nut 19 mm (.748) across flats and 1 flat seal.
Hex nut P/N : U4116

Packaging unit : 25 pieces for flying lead models - 40 pieces for other models

ERMEC
www.ermec.com
Distribución de componentes eléctricos y electrónicos
Tel.: (+34) 902 450 160
Fax: (+34) 902 433 088
ermec@ermec.com
www.ermec.com

IR series

Sealed pushbutton switches - bushing Ø 16 mm - momentary - microswitch version

Round - illuminated

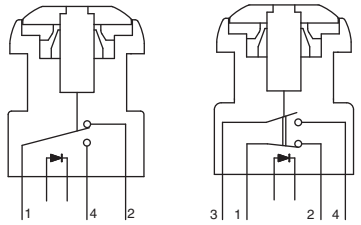

Funct. 7 (NC+NO) Funct. 8 (NC/NO)

- Four LED colours
- Tin plated LED terminals
- Silver contacts

Quick-connect | Solder lug

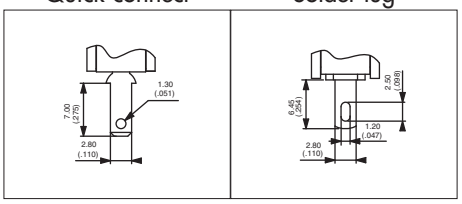

Funct. 7 (3 terminals) Funct. 8 (4 terminals)

MODEL STRUCTURE

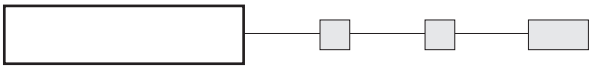

Actuator marking available on IRP models (symbol 12 mm max.). On request.

Quick-connect terminals - NC+NO - 3 terminals

Curved actuator **IRR7Z2** — NC+NO

Flat actuator **IRP7Z2** — NC+NO

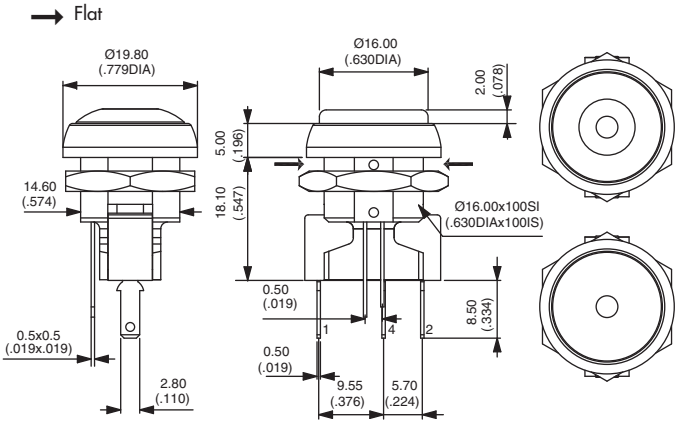

Solder lug terminals - NC/NO - 4 terminals

Curved actuator **IRR8Z2** — NC/NO combined

Flat actuator **IRP8Z2** — NC/NO combined

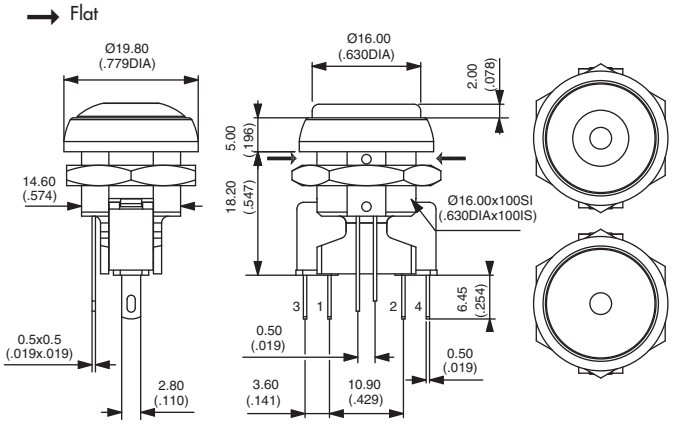

Terminals should be used as solder lugs only.

ACTUATOR COLOUR

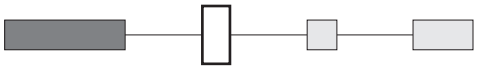

1 : blue - **B** : dark blue - **2** : black - **3** : green - **5** : yellow - **6** : red - **7** : white - **9** : orange

BUSHING AND BEZEL FINISH

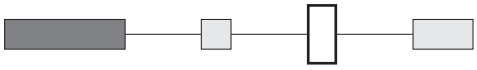

2 : black (standard) - **7** : white

LED COLOUR

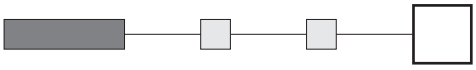

L0S : super red - **L0Y** : yellow - **L0G** : green - **L0B** : blue

Sealed pushbutton switches - bushing Ø 16 mm - momentary - microswitch version

Round - non-illuminated

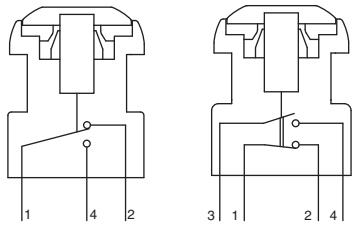

Funct. 7 (NC+NO) Funct. 8 (NC/NO)

- Silver contacts

Quick-connect | Solder lug

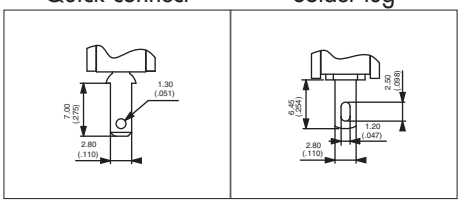

Funct. 7 (3 terminals) Funct. 8 (4 terminals)

MODEL STRUCTURE

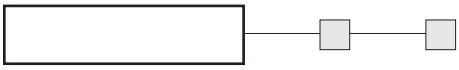

Actuator marking available on IRP models (symbol 12 mm max.). On request.

Quick-connect terminals - NC+NO - 3 terminals

Curved actuator **IRR7Z2** NC+NO

Flat actuator **IRP7Z2** NC+NO

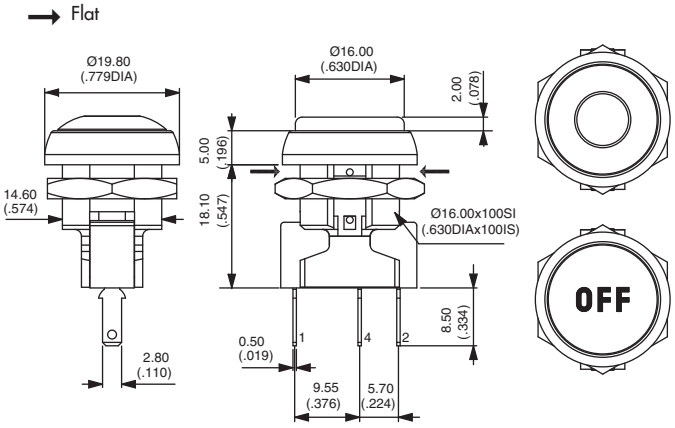

Solder lug terminals - NC/NO - 4 terminals

Curved actuator **IRR8Z2** NC/NO combined

Flat actuator **IRP8Z2** NC/NO combined

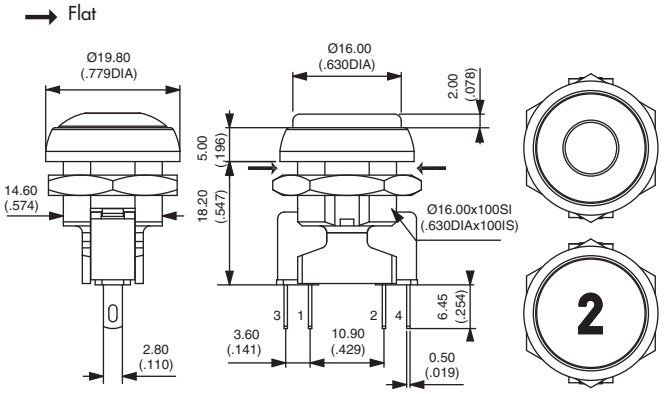

Terminals should be used as solder lugs only.

ACTUATOR COLOUR

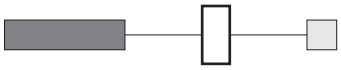

1 : blue - **B** : dark blue - **2** : black - **3** : green - **5** : yellow - **6** : red - **7** : white - **9** : orange

BUSHING AND BEZEL FINISH

2 : black (standard) - **7** : white

ERMEC
www.ermec.com
Distribución de componentes eléctricos y electrónicos
Tel.: (+34) 902 450 160
Fax: (+34) 902 433 088
ermec@ermec.com
www.ermec.com

IR series

Sealed pushbutton switches - bushing Ø 16 mm - momentary - microswitch version

Square - illuminated

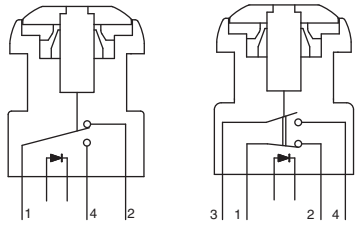

Funct. 7 (NC+NO) Funct. 8 (NC/NO)

- Four LED colours
- Tin plated LED terminals
- Silver contacts

Quick-connect | Solder lug

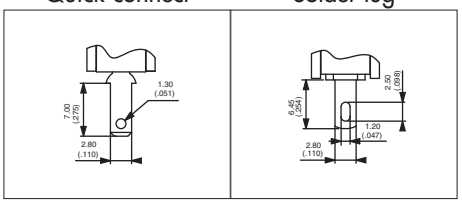

Funct. 7 (3 terminals) Funct. 8 (4 terminals)

MODEL STRUCTURE

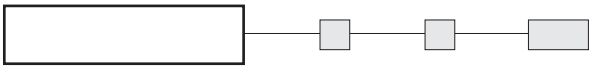

Quick-connect terminals - NC+NO - 3 terminals

IRC7Z2

NC+NO

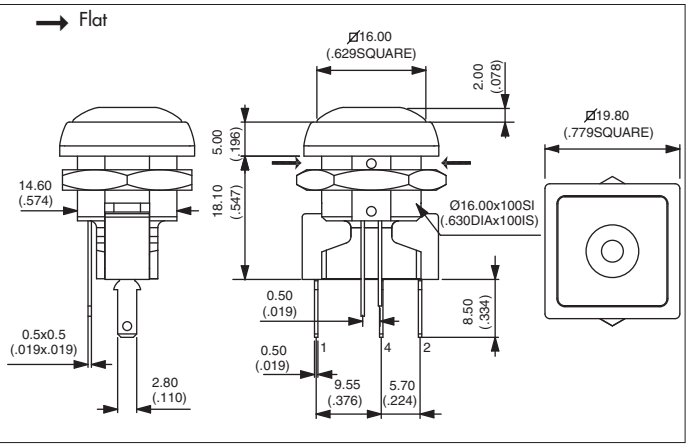

Solder lug terminals - NC/NO - 4 terminals

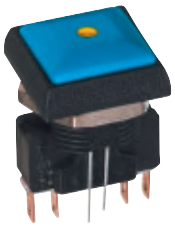

IRC8Z2

NC/NO combined

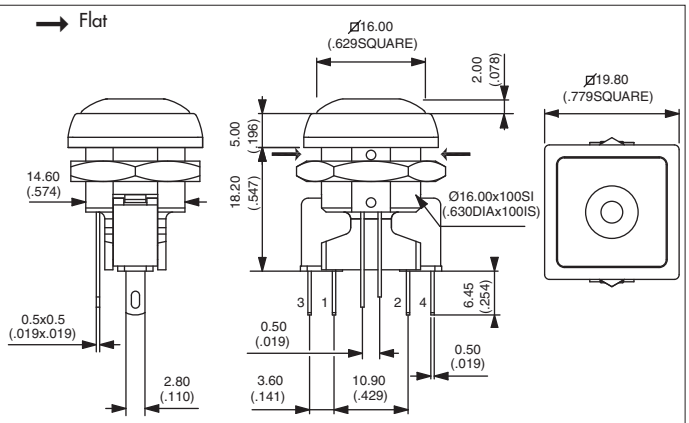

Terminals should be used as solder lugs only.

ACTUATOR COLOUR

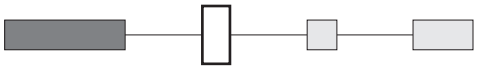

1 : blue - **B** : dark blue - **2** : black - **3** : green - **5** : yellow - **6** : red - **7** : white - **9** : orange

BUSHING AND BEZEL FINISH

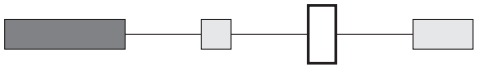

2 : black (standard) - **7** : white

LED COLOUR

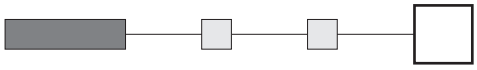

L0S : super red - **L0Y** : yellow - **L0G** : green - **L0B** : blue

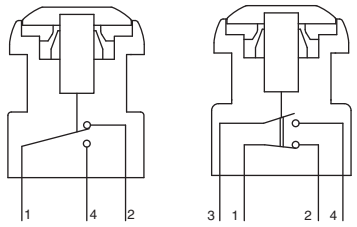

Funct. 7 (NC+NO) Funct. 8 (NC/NO)

- Silver contacts

Quick-connect | Solder lug

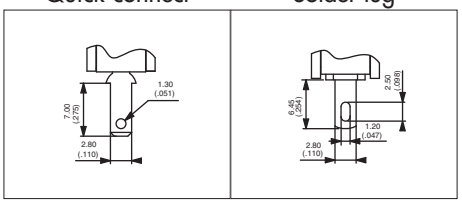

Funct. 7 (3 terminals) Funct. 8 (4 terminals)

MODEL STRUCTURE

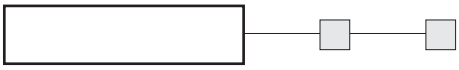

Quick-connect terminals - NC+NO - 3 terminals

IRC7Z2

NC+NO

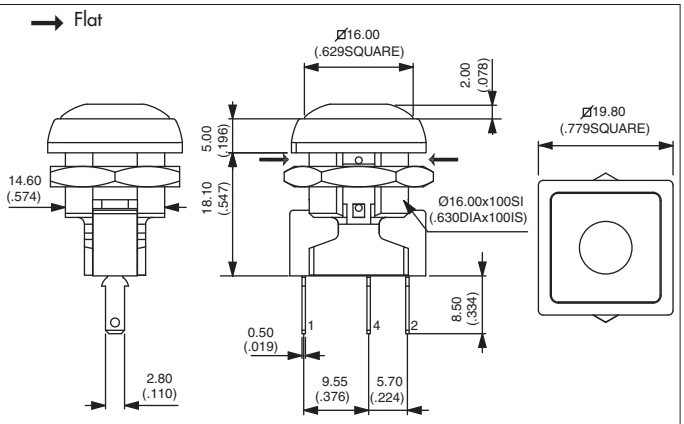

Solder lug terminals - NC/NO - 4 terminals

IRC8Z2

NC/NO combined

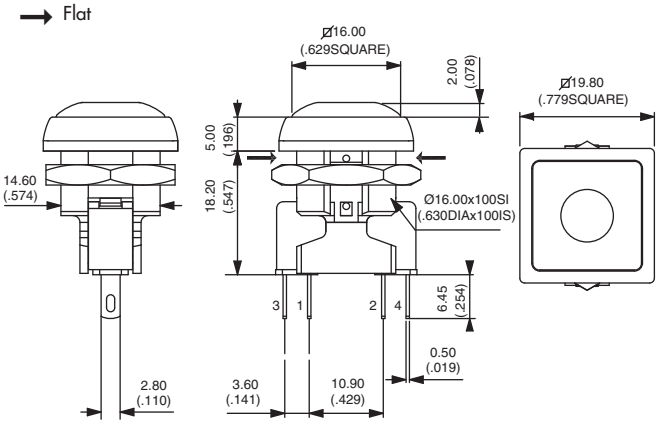

Terminals should be used as solder lugs only.

ACTUATOR COLOUR

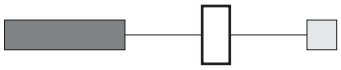

1 : blue - **B** : dark blue - **2** : black - **3** : green - **5** : yellow - **6** : red - **7** : white - **9** : orange

BUSHING AND BEZEL FINISH

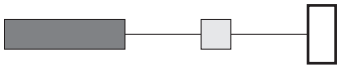

2 : black (standard) - **7** : white

ERMEC
www.ermec.com
Distribución de componentes eléctricos y electrónicos
Tel.: (+34) 902 450 160
Fax: (+34) 902 433 088
ermec@ermec.com
www.ermec.com

IR series

Sealed pushbutton switches - bushing Ø 16 mm - latching

Distinctive features and specifications

ERMEC
www.ermec.com
Distribución de componentes eléctricos y electrónicos
Tel.: (+34) 902 450 160
Fax: (+34) 902 433 088
ermec@ermec.com
www.ermec.com

- ❑ **Latching action models**
- ❑ **Sealed to IP67**
- ❑ **Illuminated or non-illuminated**
- ❑ **Flat round actuator for optional marking**

ENVIRONMENTAL SPECIFICATIONS

- Front panel sealing : IP67 according to IEC 60529
- Shock resistance : 100 g according to IEC 512-4, test 6c
- Vibration resistance : 10-500Hz - 10 g according to IEC 512-4, test 6d
- Salt spray : IEC 512-6, test 11f
- Operating temperature : -40°C to +85°C

GENERAL SPECIFICATIONS

- Panel thickness : 8 mm (.314) max.
- Total travel : 2,5 mm (.098) +/- 0,3 mm
- Typical operating force : 5N +/- 2N
- Mechanical life : 200.000 cycles
- Torque : 0,8 Nm max. applied to nut
- Soldering : 320°C max. for 3 sec.

ELECTRICAL SPECIFICATIONS

- Max. current/voltage rating with resistive load : 100mA 24VDC - 200.000 cycles
- Initial contact resistance : 100 mΩ max.
- Insulation resistance : 1 GΩ min. at 500VDC
- Dielectric strength : 1.500 Vrms between terminals

LED COMPONENT SPECIFICATIONS

LED colour	Forward current	Typ. forward voltage	Max. forward voltage
Super red (L0S)	20mA	1,95V	1,95V
Yellow (L0Y)	20mA	2V	2,05V
Green (L0G)	20mA	3,2V	3,70V
Blue (L0B)	20mA	3,2V	4V

A resistor must be series-connected by the user.

$$\text{Resistor value} = \frac{\text{supply voltage - LED forward voltage}}{\text{LED forward current}}$$

On flying lead versions, the LED resistor can be integrated by APEM on request.

MATERIALS

- Case : thermoplastic UL94-V0
- Plunger : polyamide
- Bushing/bezel : polyamide
- Contacts : silver, gold plated
- Multi-wire lead AWG20, section 0,6 mm²
- LED wire : AWG26, section 0,12 mm²
- Lens : polycarbonate
- Terminal seal : epoxy

PANEL CUT-OUT

① Flat seal

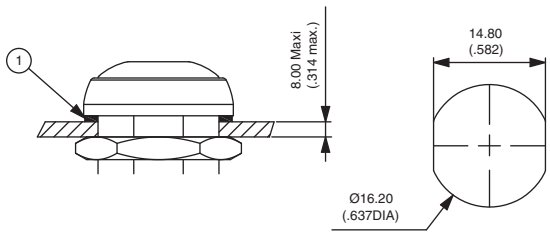

MATRIX MOUNTING

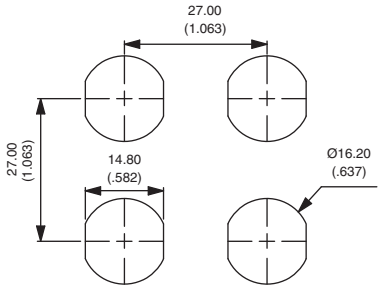

ERMEC
www.ermec.com
Distribución de componentes eléctricos y electrónicos
Tel.: (+34) 902 450 160
Fax: (+34) 902 433 088
ermec@ermec.com
www.ermec.com

IR series

Sealed pushbutton switches - bushing Ø 16 mm - latching

Overview

MODEL STRUCTURE

IR

SERIES

Actuator shape

C	Square
R	Round, curved
P	Round, flat

Electrical function

1	ON - OFF

Terminals

S	Solder lugs
F	Flying leads
P	Straight PC
Z	Quick-connect

Contacts

4	Silver, gold plated

OPTIONS

Actuator colour

1	Blue
B	Dark blue
2	Black
3	Green
5	Yellow
6	Red
7	White
8	Bright chrome
9	Orange
A	Satin chrome

Bushing & bezel finish

2	Black (standard)

Other : on request.

LED colour

Blank	Non-illum.
L0S	Super red
L0Y	Yellow
L0G	Green
L0B	Blue

ABOUT THIS SERIES

On the following pages, you will find successively :
model structure of switches and options in the same order as in above chart

Dimensions : first dimensions are in mm while inches are shown as bracketted numbers.

NOTICE : please note that not all combinations of above numbers are available.
Refer to the following pages for further information.

Mounting accessories : Standard hardware supplied : 1 hex nut 19 mm (.748) across flats and 1 flat seal
Hex nut P/N U4116.

Packaging unit : 25 pieces for flying lead models - 40 pieces for other models

ERMEC
www.ermec.com
Distribución de componentes
eléctricos y electrónicos
Tel.: (+34) 902 450 160
Fax: (+34) 902 433 088
ermec@ermec.com
www.ermec.com

IR series

Sealed pushbutton switches - bushing Ø 16 mm - latching

Round - illuminated

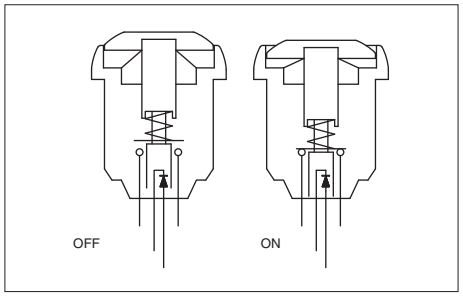

- Four LED colours
- Tin plated LED terminals
- Gold plated contacts

Solder lug **S**

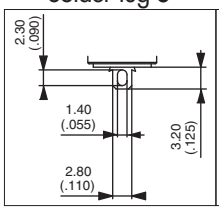

Straight **P**

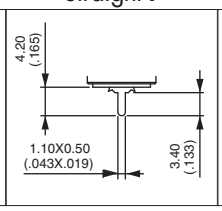

Quick-connect **Z**

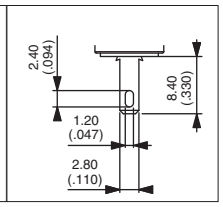

MODEL STRUCTURE

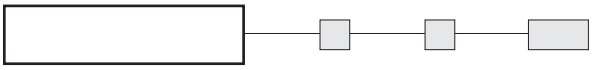

Plunger marking available on IRP models (symbol 12 mm max.). On request.

Solder lug terminals

Curved actuator
IRR1S4 OFF - ON

Flat actuator
IRP1S4 OFF - ON

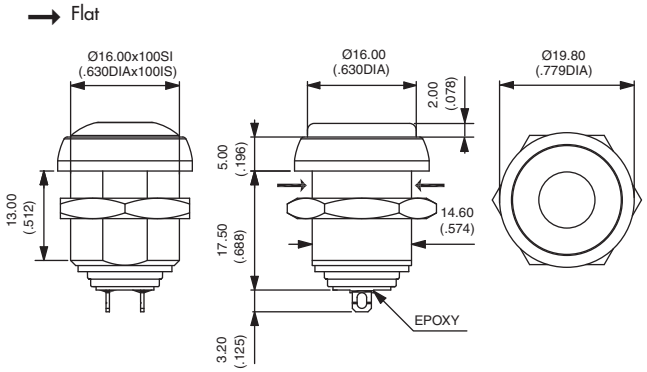

Also available with straight PC terminals : **IR•1P4**
& quick-connect terminals : **IR•1Z4**.

Sealed flying lead terminals

Curved actuator
IRR1F4 OFF - ON

Flat actuator
IRP1F4 OFF - ON

Wire colours : black : contact,
red : LED anode (+), blue : LED cathode (-)

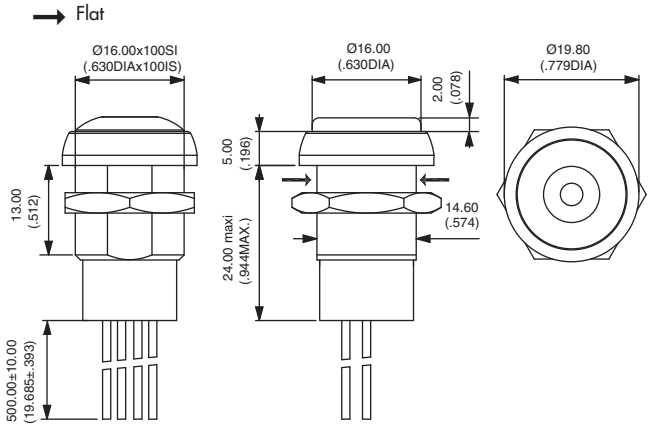

ACTUATOR COLOUR

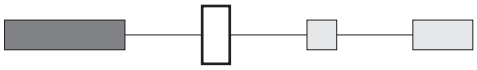

1 : blue - **B** : dark blue - **2** : black - **3** : green - **5** : yellow - **6** : red - **7** : white - **8** : bright chrome - **9** : orange
A : satin chrome

BUSHING AND BEZEL FINISH

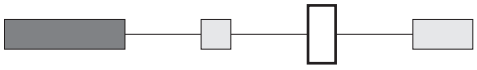

2 : black (standard)

LED COLOUR

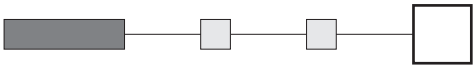

L0S : super red - **L0Y** : yellow - **L0G** : green - **L0B** : blue

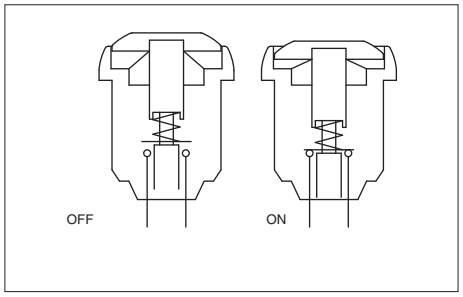

• Gold plated contacts

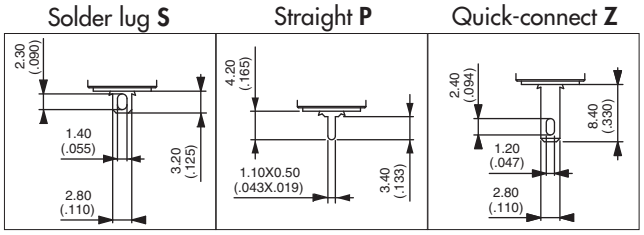

MODEL STRUCTURE

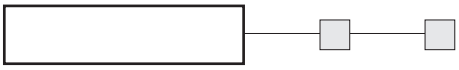

Plunger marking available on IRP models (symbol 12 mm max.). On request.

Solder lug terminals

Curved actuator
IRR1S4 OFF - ON

Flat actuator
IRP1S4 OFF - ON

Also available with straight PC terminals : **IR•1P4**
& quick-connect terminals : **IR•1Z4**.

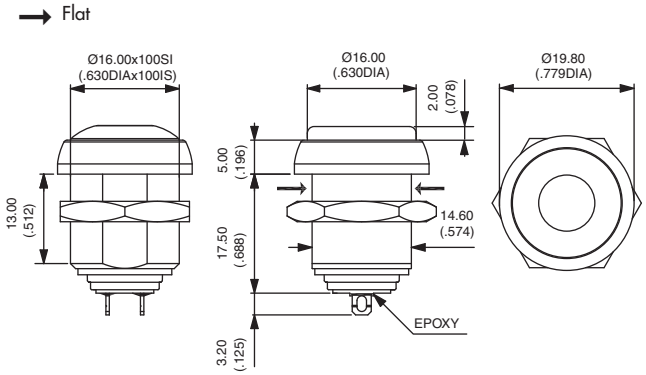

Sealed flying lead terminals

Curved actuator
IRR1F4 OFF - ON

Flat actuator
IRP1F4 OFF - ON

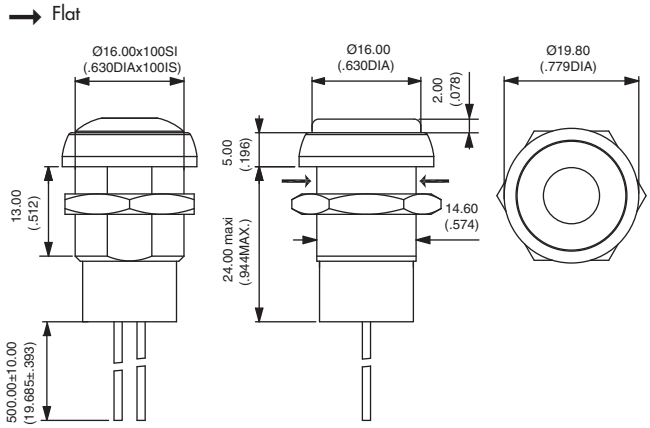

ACTUATOR COLOUR

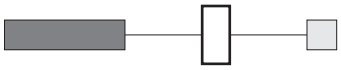

1 : blue - **B** : dark blue - **2** : black - **3** : green - **5** : yellow - **6** : red - **7** : white - **8** : bright chrome - **9** : orange
A : satin chrome

BUSHING AND BEZEL FINISH

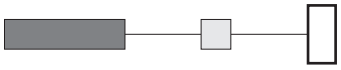

2 : black (standard)

ERMEC
www.ermec.com
Distribución de componentes eléctricos y electrónicos
Tel.: (+34) 902 450 160
Fax: (+34) 902 433 088
ermec@ermec.com
www.ermec.com

ERMEC
www.ermec.com
Distribución de componentes eléctricos y electrónicos
Tel.: (+34) 902 450 160
Fax: (+34) 902 433 088
ermec@ermec.com
www.ermec.com

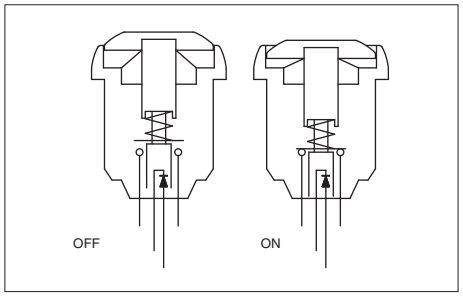

- Four LED colours
- Tin plated LED terminals
- Gold plated contacts

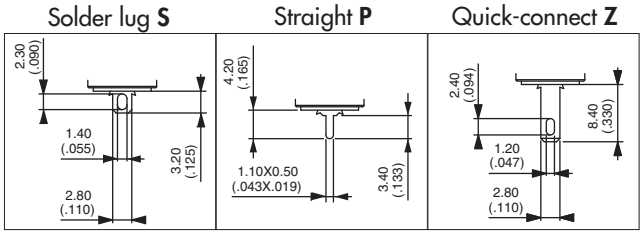

MODEL STRUCTURE

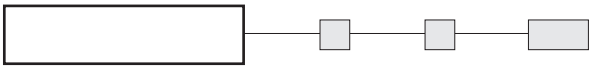

Solder lug terminals

Curved actuator
IRC1S4 OFF - ON

Also available with straight PC terminals : **IRC1P4**
& quick-connect terminals : **IRC1Z4**.

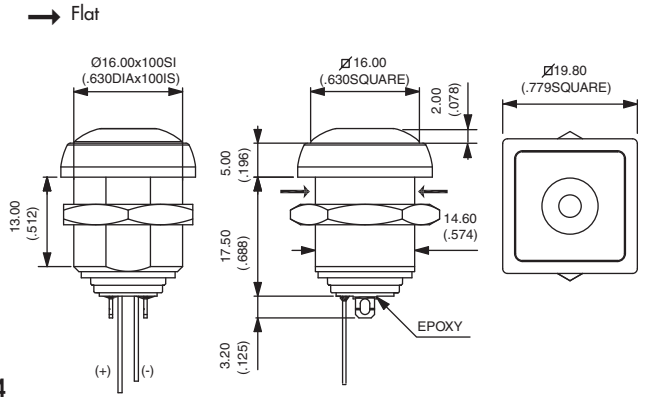

Sealed flying lead terminals

Curved actuator
IRC1F4 OFF - ON

Wire colours : black : contact,
red : LED anode(+), blue : LED cathode (-)

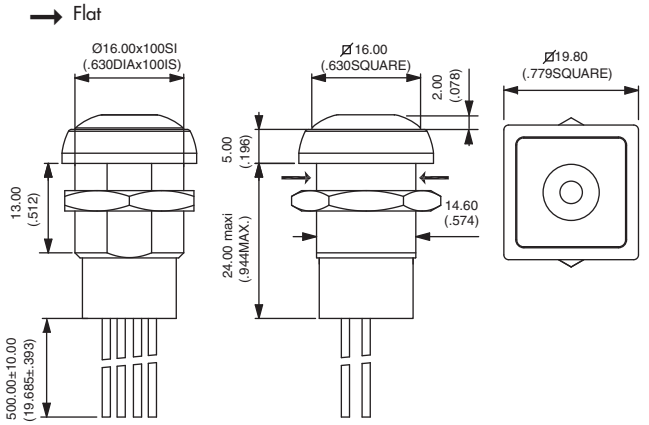

ACTUATOR COLOUR

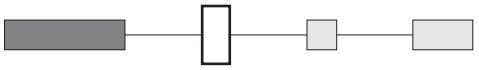

1 : blue - **B** : dark blue - **2** : black - **3** : green - **5** : yellow - **6** : red - **7** : white - **8** : bright chrome - **9** : orange
A : satin chrome

BUSHING AND BEZEL FINISH

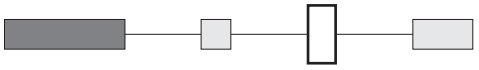

2 : black (standard)

LED COLOUR

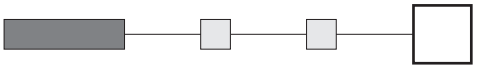

L0S : super red - **L0Y** : yellow - **L0G** : green - **L0B** : blue

ERMEC
www.ermec.com
Distribución de componentes eléctricos y electrónicos
Tel.: (+34) 902 450 160
Fax: (+34) 902 433 088
ermec@ermec.com
www.ermec.com

IR series

Sealed pushbutton switches - bushing Ø 16 mm - latching

Square - non-illuminated

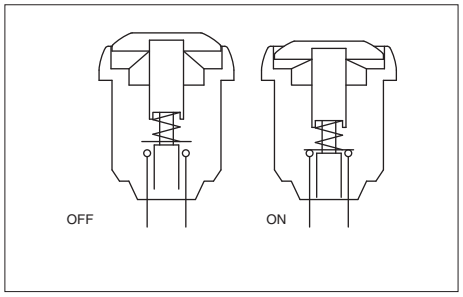

• Gold plated contacts

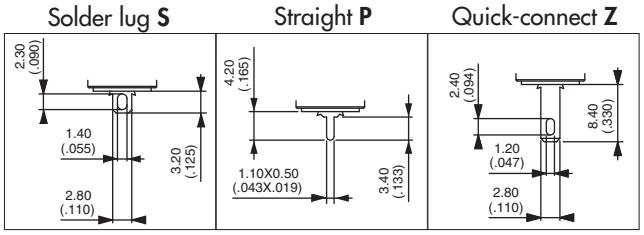

MODEL STRUCTURE

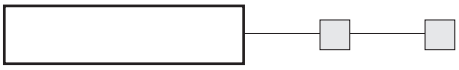

Solder lug terminals

Curved actuator
IRC1S4 OFF - ON

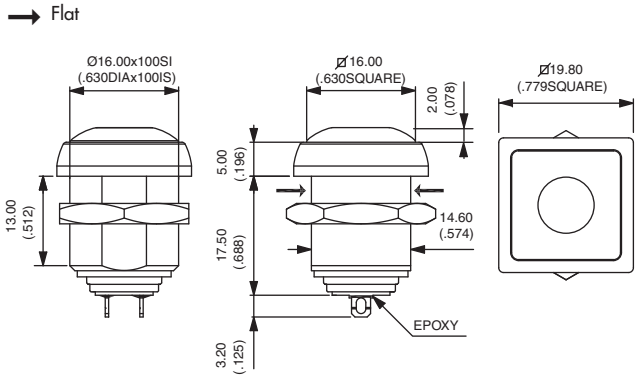

Also available with straight PC terminals : **IRC1P4**
& quick-connect terminals : **IRC1Z4**.

Sealed flying lead terminals

Curved actuator
IRC1F4 OFF - ON

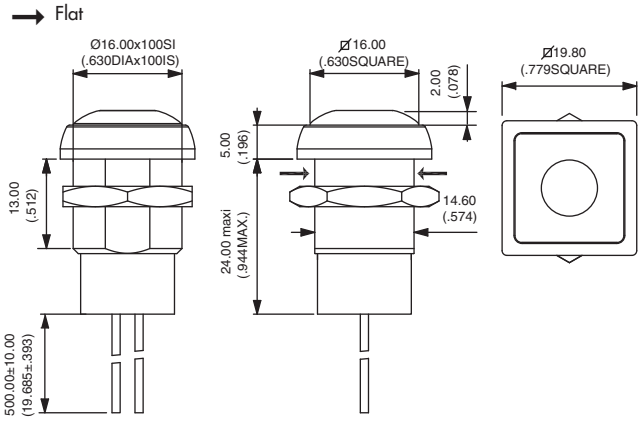

ACTUATOR COLOUR

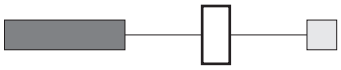

1 : blue - **B** : dark blue - **2** : black - **3** : green - **5** : yellow - **6** : red - **7** : white - **8** : bright chrome - **9** : orange
A : satin chrome

BUSHING AND BEZEL FINISH

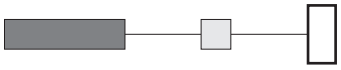

2 : black (standard)

IA series

Low profile pushbutton switches for harsh environments - bushing Ø 16 mm - momentary

Distinctive features - Specifications - Overview

- ❑ **Resistant to frost, sand and hydrocarbons**
- ❑ **Tactile feedback**
- ❑ **Front panel sealed to IP67**

ENVIRONMENTAL SPECIFICATIONS

- Front panel sealing (see drawing opposite) : IP67
- Salt spray : IEC 512-6, test 11f
- Operating temperature : -20°C to +65°C

ELECTRICAL AND GENERAL SPECIFICATIONS

- Max. current/voltage rating with resistive load : 2A 24VDC
- Initial contact resistance : 100mΩ max.
- Insulation resistance : 100 MΩ min. at 500VDC
- Dielectric strength : 500 Vrms
- Electrical life at full load : 1.000.000 cycles

- Panel thickness : 7 mm (.276) max.
- Total travel : 1,5 mm (.059) +/- 0,3 mm
- Typical operating force : 7N +/- 2N
- Mechanical life : 1.000.000 cycles
- **Torque : 0,5 to 1Nm max. applied to nut**

MATERIALS

- Case/bushing : thermoplastic
- Actuator : polyurethane
- Contacts : silver, gold plated
- Multi-wire lead AWG20, section 0,6 mm².
- Terminal seal : epoxy

PANEL MOUNTING

→ Flat seal

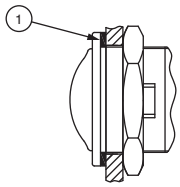

IA						
SERIES	Actuator shape	Electrical function	Terminals	Contacts	Acuator colours	Case colour
	R round	3 Normally open (NO) 5 NC/NO combined	F Flying leads	1 Silver, gold plated	1 Blue 2 Black 3 Green 5 Yellow 6 Red 7/1 White 9 Orange	00 Black

Dimensions : First dimensions are in mm while inches are shown as bracketed numbers.

A sealing boot is available to protect the switches against frost and sand. See end of this catalogue.

Mounting accessories : Standard hardware supplied : 1 hex nut 19 mm (.748) across flats and 1 flat seal.
Knurled nut U3327 available on request.

Packaging unit : 25 pieces

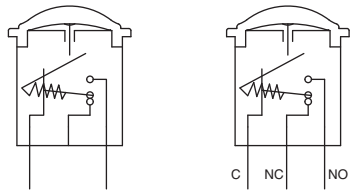

NO NC/NO combined

- Panel cut-out Ø 16,2 mm (.657)
- Min. pitch for matrix mounting :
  - with standard hex nut : 27 x 27 mm (1.062 x 1.062)
  - with knurled nut U3327: 20 x 20 mm (.787x.787)

MODEL STRUCTURE

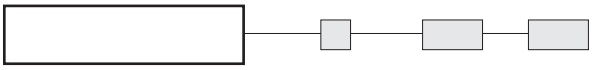

NO model has 2 terminals only.

Models

Normally open (NO)
IAR3F

NC/NO combined
IAR5F

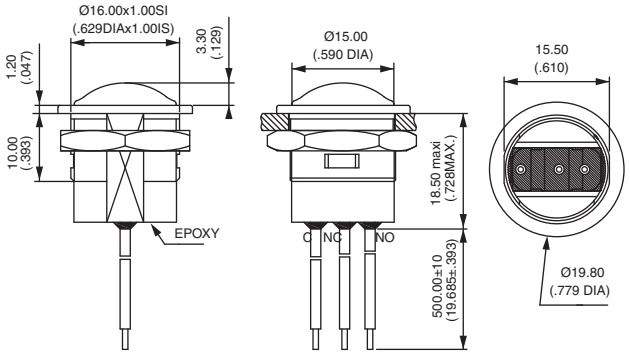

Wire colours (NC/NO) : black = common, brown = NC, blue = NO

CONTACT MATERIAL

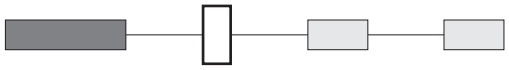

1 Silver, gold plated

ACTUATOR COLOUR

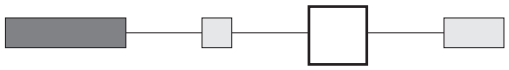

1 : blue - **2** : black - **3** : green - **5** : yellow - **6** : red - **7/1** : white - **9** : orange

CASE COLOUR

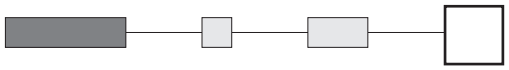

00 : black

ERMEC
www.ermec.com
Distribución de componentes eléctricos y electrónicos
Tel.: (+34) 902 450 160
Fax: (+34) 902 433 088
ermec@ermec.com
www.ermec.com

ERMEC
www.ermec.com
Distribución de componentes eléctricos y electrónicos
Tel.: (+34) 902 450 160
Fax: (+34) 902 433 088
ermec@ermec.com
www.ermec.com

Sealing

Degree of protection provided by the enclosures of electric appliances according to IEC 60529, DIN 40050 and NFC 20-010.

SEALING IP67

IP
(Ingress Protection)

6
Totally protected against dust

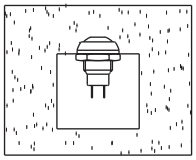

7
Protected against the effects of immersion up to 1 m water (30 mn)

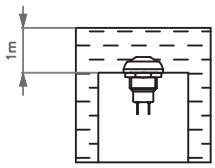

The illustrations show non-illuminated models.

SEALING IP69K

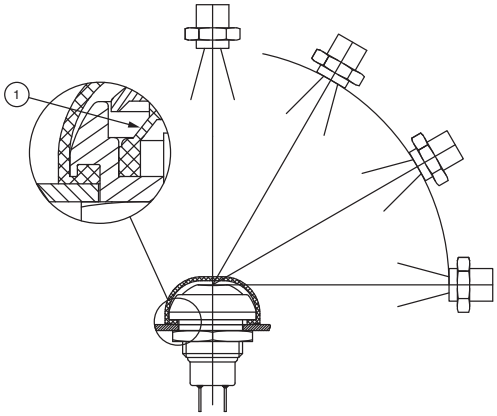

High pressure, high temperature wash down

IP69K test conditions

. Pressure : 80 - 120 bars
. Distance : 15 cm
. Temperature : 80°C ± 5°C
. Flow : 14 - 16 l/mn
. Duration : 30 seconds per position

① Elastomeric membrane

ADDITIONAL SEALING FOR IP-IB-IS SERIES

For ROUND plungers only, illuminated or non-illuminated.

By silicone boot for protection against frost and abrasion by sand. Order separately.
- transparent : **U5125**
- blue : **U5125-1**
- black : **U5125-2**
- red : **U5125-6**

Operating temperature : -40°C to +85°C
Life expectancy : 500.000 cycles

Note : the flat seal should not be used in this case.

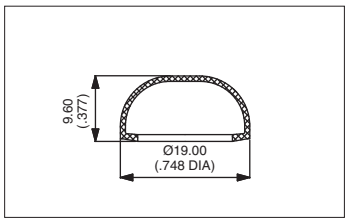

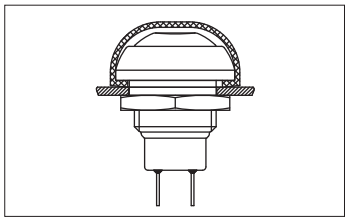

ADDITIONAL SEALING FOR IA SERIES

By silicone boot. Order separately.
- Black : **U6602**
- Yellow : **U6605**
- Red : **U6606**

Operating temperature : -40°C to +85°C
Life expectancy : 1.000.000 cycles

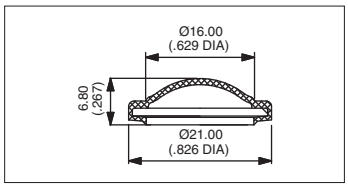

APEM,
a world of switching capabilities

The APEM group is one of the world's largest manufacturers of switches, LED indicators, joysticks and switch panels.

APEM manufactures switch products for multiple industrial markets including: instrumentation, medical, security, communications, industrial automation, military and transport.

Other pushbutton switches

AV pushbutton switches

The AV series is a range of very robust pushbutton switches consisting of 2 families: anti-vandal and security pushbutton switches. This range features a large variety of models, with different bushing diameters, numerous materials and many electrical functions. Marking and illumination options are also available.

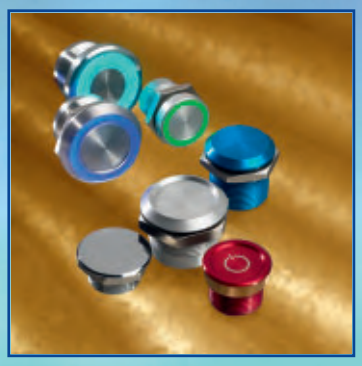

PBA piezo switches

PBA series piezo switches feature very long life expectancy, high performance sealing, easy to clean metal surface, ring or dot illumination and a large variety of shapes.

Applications for these products include medical, food-processing, home automation, car wash and mining.

APEM product ranges

APEM

ERMEC
www.ermec.com
Distribución de componentes eléctricos y electrónicos

Tel.: (+34) 902 450 160
Fax: (+34) 902 433 088
ermec@ermec.com
www.ermec.com

Addresses of sales subsidiaries and distributors on www.apem.com

I1001-A