FRIALEN®

FRIALEN®-Repair Sleeves RW
suitable only for pipes SDR 11

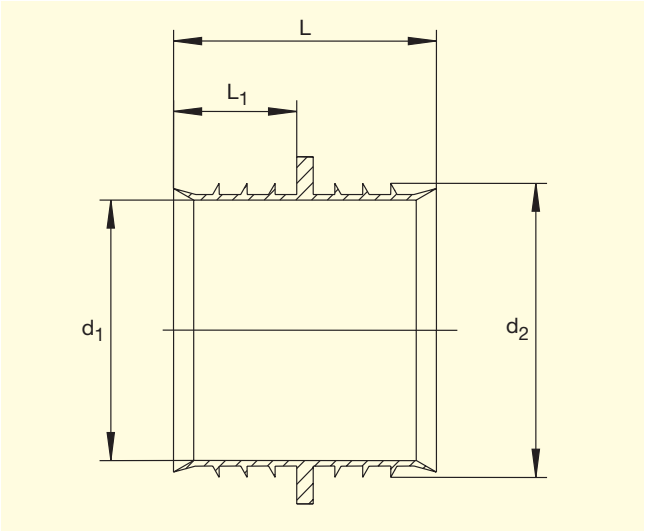



d	d_1	d_2	Order Ref..	Stock-status	VE	PE	L	L_1	Weight kg/each
32	21,2	27.0	T-615 127	1	50	4.500	35	16	0.004
40	27,6	34.0	T-615 128	1	50	4.500	35	16	0.005
50	35,6	42.0	T-615 129	1	50	4.500	35	16	0.007
63	45,9	52.5	T-615 130	1	40	3.600	47	22	0.012

Measure d means: Repair Sleeves for **pipe** d xy

Please turn over for important information regarding application of the **FRIALEN®**-Repair Sleeves RW

FRIATEC

FRIALEN®-Repair Sleeves RW
suitable only for pipes SDR 11

Areas of Application

The FRIALEN®-Repair Sleeve is used for the repair of house connection water pipes in the depressurised state. The Repair Sleeve prevents the ingress of water into the fused area of the FRIALEN®-Couplers MB or UB.

Assembly Instructions

The pipe is parted and the damaged piece is taken out. A new piece of pipe is made to fit. Two FRIALEN®-Couplers are pushed onto this. The Repair Sleeves are pushed into the existing pieces of pipeline and the new made to measure piece of pipe positioned between them. The couplers are then fitted halfway over the sleeves and fused.

The Repair Sleeve RW is only suitable for pipe SDR 11.

One good reason for using the FRIALEN®-Repair Sleeves

- **For repair or connection work on domestic water connection pipes the sleeve prevents residual water from running back into the fusion zone.**

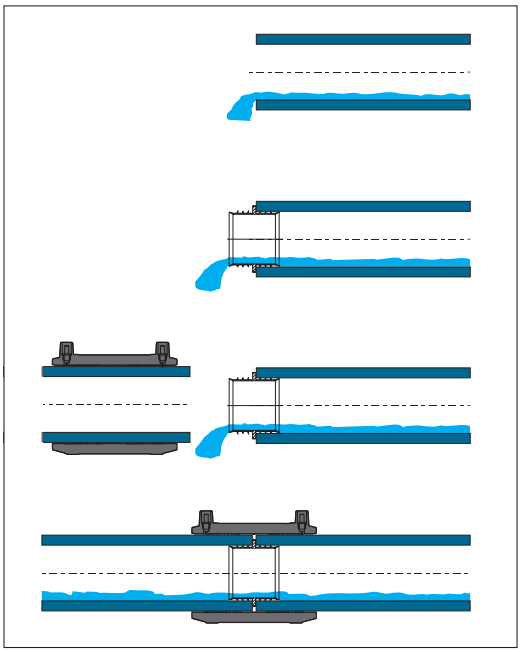

Please find our datasheets for downloading on the internet at www.friatec.de

For further information, please call our FRIALEN®-customer service staff and specialist advisers.

FRIATEC Aktiengesellschaft · Technical Plastics Division
P.O.B. 71 02 61 · D-68222 Mannheim
Telephone +49 621 486-0 · Telefax +49 621 479196
www.friatec.de · E-Mail: info-frialen@friatec.de

FRIATEC an Aliaxis company

2176e