FRIALEN® SAFETY FITTINGS

UB 39.5V SLIDE-OVER COUPLERS SUITABLE FOR 39.5V FUSION PARAMETER



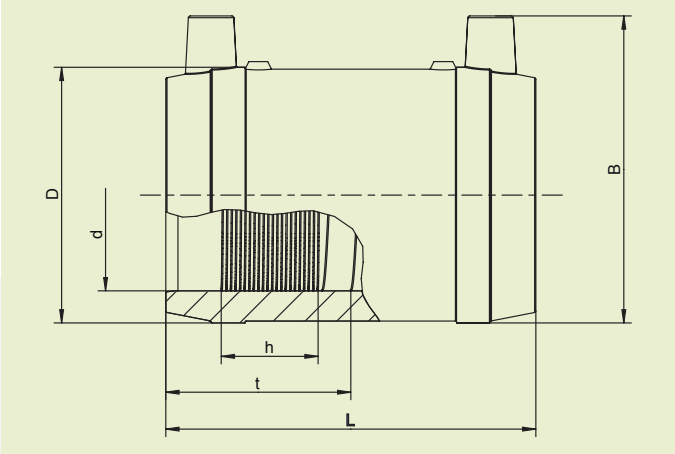

PE 100 SDR 11
Maximum working pressure 16 bar (water)/10 bar (gas)

Article description	d	Order Ref.	Stock-status	BX	PU	D	L	t	h	B	Weight kg/each
UB	25	612661	1	90	2.880	37	78	39	25	53	0.054
UB 39.5V	32	616517 ②	1	60	1.920	44	81	40	25	61	0.068
UB 39.5V	40	616519 ②	1	40	1.280	53	88	44	26	69	0.087
UB 39.5V	50	616521 ②	1	25	800	65	98	49	28	80	0.136
UB	63	612665	1	15	480	82	112	56	29	96	0.225
UB	75	612666	1	50	400	98	122	61	32	110	0.360
UB	90	612667	1	30	240	114	157	78	51	127	0.510
UB	110	612668	1	24	192	137	159	79	49	152	0.705
UB	125	612669	1	16	128	156	172	86	46	169	0.946
UB	140	615001	1	12	96	174	184	92	52	185	1.270
UB	160	612671	1	8	64	199	190	95	52	207	1.772
UB	180	612672	1	6	48	220	210	105	63	228	2.088
UB	200	612673	1	1	56	247	220	110	63	252	2.798
UB	225	612674	1	1	36	277	236	118	71	280	3.950
UB	250	612675	1	1	24	315	246	123	68	315	5.800
UB	315	612670	1	1	18	390	300	150	78	390	10.040
UB	400	615075 ①	1	1	3	500	320	160	90	500	20.800

Slide-over couplers UB 39.5V from d 25 to d 400 PE 100 SDR 11 are to be processed with pipes SDR 11 / SDR 17.6. Minimum wall thickness s min ≥ 3 mm. Other wall thicknesses on request. Please observe the marking directly at the product, which is mandatory.
DVGW-Registration Nos. DV-8601AU2248, DV-8606AU2249 and DV-8611AU22500.
The allowed processing range by using electrofusion units with constant output voltage is by an ambient temperature between -5°C and +35°C. The stated fusion time on the fitting barcode is for the complete temperature range.

① separate fusion zones
② for HDPE pipes SDR 11

FRIALEN® SAFETY FITTINGS

UB 39.5V SLIDE-OVER COUPLERS SUITABLE FOR 39.5V FUSION PARAMETER

Areas of Application

FRIALEN Slide-over couplers UB 39.5V is used for cut and lay pipe connections. These couplers are processable for electrofusion units with a constant output voltage of 39.5V by manual input of the fusion time. For the manual input of the fusion parameters, the fusion time is stated on the fitting barcode.

Additional areas of application:

- Integration of adapters into an existing pipeline
- Connection of pipelines with fixed or restraint points
- Reinforcement / sealing of localised pipe damage
- Reinforcement of pinch points

Assembly Instructions

The fusion of pipe ends with the FRIALEN Slide-over coupler UB 39.5V takes place using FRIALEN-fusing – leakproof and longitudinally strong.

The pipe ends are prepared according to the general installation instructions (see “Assembly Instructions“ for “FRIALEN-Safety Fittings for house connections and distribution pipes up to d 225“ and “FRIALEN-Special Technology for laying large bore pipes and relining pipe networks“). This involves removing the oxide skin and cleaning the pipe ends. Please note that spigot of valves must be at least half as long as the coupler.

For removal of the oxide skin, FWSG scraper tools are available which facilitate a uniform swarf removal and a reproducible quality of the fusion area preparation.

Good reasons for using the FRIALEN-Slide-over Coupler UB 39.5V:

- Compact construction
- Large coupler depth for ease of pipe guiding (no holding clamps required)
- Extra wide fusion zones
- Maximum stability through great wall thickness
- Cold zones at the front side and in the middle of the coupler
- Exposed heating coil for direct heat transmission to the pipe
- Small annular gap for build-up of optimum joining pressure in the fusion zone
- Contacts safe to touch
- Fusion indicators for visual fusion control
- Dimension d 400: External reinforcement for an ideal fusion pressure
- Durable batch marking
- Individually wrapped for dirt protection
- Additional barcode for tracing back the fitting (Traceability-Coding).