FRIALEN® Installation kits for Ball Valves and Tapping Ball Valves (Standard and Top-Loading) BS



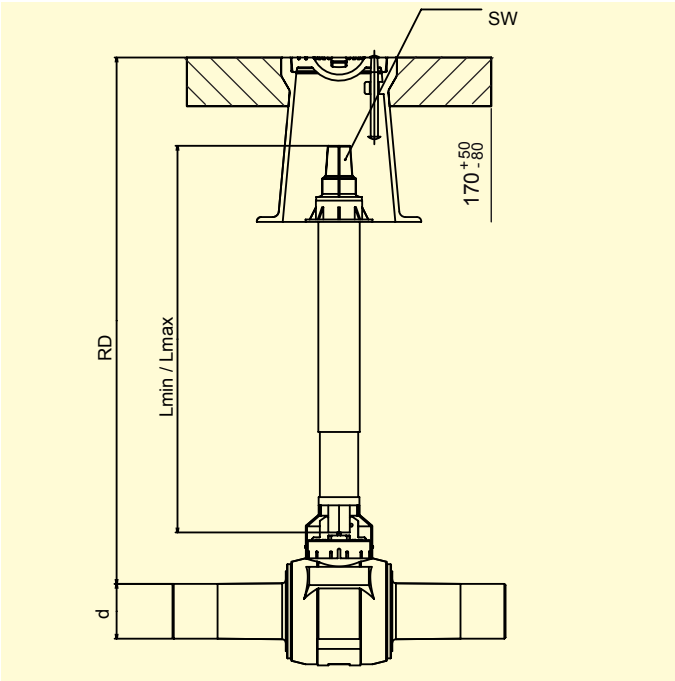

d	RD in m	Order Ref.	Stock-status	BX	PU	L_{min}	L_{max}	SW1	Weight kg/each
32 - 50	0,45-0,70	**615741**	1	1	42	398	543	30	1,600
32 - 50	0,60-1,00	**615328**	1	1	42	490	785	14	1,400
32 - 50	0,60-1,00	**615957**	1	1	42	548	843	30	1,900
32 - 50	1,00-1,50	**615330**	1	1	42	799	1343	30	2,850
32 - 50	1,20-2,00	**616068**	2	1	42	991	1785	14	3,500
32 - 50	1,20-2,00	**615329**	2	1	42	1049	1843	30	3,650
63 - 225	0,70-1,00	**615958**	1	1	42	537	812	30	2,650
63 - 225	0,70-1,00	**615310**	1	1	42	490	785	14	1,400
63 - 225	1,00-1,50	**615331**	1	1	42	786	1312	30	3,900
63 - 225	1,20-2,00	**616069**	2	1	42	980	1754	14	5,550
63 - 225	1,20-2,00	**615311**	2	1	42	1038	1812	30	5,000

Other length on request

Please turn over for important information regarding application of our products.

FRIALEN® Installation kits for Ball Valves and Tapping Ball Valves (Standard and Top-Loading) BS

Areas of Application

Telescopic actuating linkage for operation of the FRIALEN KHP, AKHP und AKHP-TL from the street cap.

Assembly Instructions

Before fusion, the FRIALEN-KHP, AKHP and AKHP-TL must be aligned to suit the type of actuation intended, in order to ensure that the installation kit BS will seat correctly.

Ten good reasons for using the FRIALEN-Installation kits BS:

- **Protective pipe of polyethylene protects from intrusion of sand or soil**
- **Assembly without tools**
- **Self supporting in any extended position**
- **Safe from being pulled out**
- **Corrosion proof**
- **Telescope assembly set can be adjusted even once in place and filled**
- **Constructive harmonizing of the transferable torque onto the FRIALEN-Ball Valve**
- **Connection pins made from stainless steel**
- **Coloured marking disk for use with gas and water.**
- **Parts of the protective pipe are fully welded together**

For further information, please call our customer service staff and specialist advisers.

FRIATEC Aktiengesellschaft · Technical Plastics Division
P.O.B. 71 02 61 · D-68222 Mannheim
Telephone +49 621 486-1431 · Telefax +49 621 479196
www.friatec.com · E-Mail: info-frialen@friatec.de

Please find our datasheets for downloading on the internet at **www.friatec.com**

FRIATEC
an Aliaxis company