FRIALEN® T-Pieces TA (KIT) with extra long outlet spigot in kit version; coupler MB with removeable center stop included



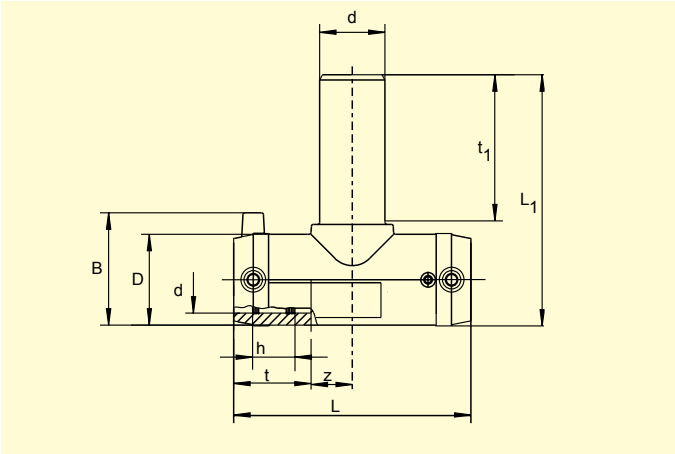

PE 100 SDR 11
Maximum working pressure 16 bar (water)/10 bar (gas)

d	Order Ref.	Stock-status	BX	PU	D	L	L_1	t	t_1	z	h	B	Weight kg/each
25	**616335**	1	40	720	36	108	110	41	66	13	19	54	0,124
32	**612161**	1	30	540	44	116	131	39	80	19	22	61	0,190
40	**612162**	1	20	360	53	146	151	43	88	30	25	69,5	0,290
50	**612163**	1	10	180	67	175	186	49	110	38	28,5	80	0,500
63	**612164**	1	5	90	81	197	203	56	115	42	33	93,5	0,750

FRIALEN safety fittings can be fused to pipes SDR11 - SDR 17.6, minimum wall thickness s min ≥ 3 mm. Other SDR-stages on request.
Please observe the marking directly at the product, which is mandatory.
DVGW-Registration No.: DV-8601AU2248

FRIALEN® T-Pieces reduced TA red with extra long outlet spigot

NEW!



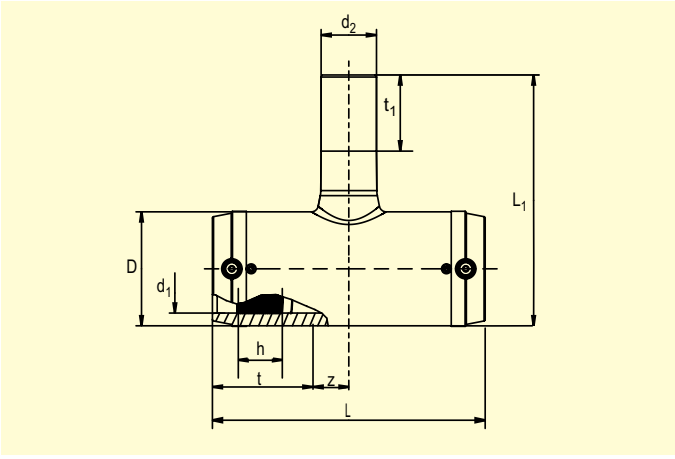

PE 100 SDR 11
Maximum working pressure 16 bar (water)/10 bar (gas)

	d_1/d_2	Order Ref.	Stock-status	BX	PU	D	L	L_1	t	t_1	z	h	B	Weight kg/each
NEW!	32/20	**616417**	1	30	540	45,5	116	117	44	42	14	21,5	61,5	0,110
NEW!	40/32	**616418**	1	20	360	54,5	146	148	45,5	51	27,5	24,5	70	0,170
NEW!	50/32	**616419**	1	10	180	68,5	175	158	55	51	32,5	27,8	82	0,295
NEW!	50/40	**616420**	1	10	180	68,5	175	167	55	55	32,5	27,8	82	0,315
NEW!	63/32	**616421**	1	10	180	83,5	197	173	63	51	35,5	32	96	0,435
NEW!	63/40	**616422**	1	10	180	83,5	197	182	63	55	35,5	32	96	0,450
NEW!	63/50	**616423**	1	10	180	83,5	197	197	63	60	35,5	32	96	0,490

FRIALEN safety fittings can be fused to pipes SDR11 - SDR 17.6, minimum wall thickness s min ≥ 3 mm. Other SDR-stages on request.
Please observe the marking directly at the product, which is mandatory.
DVGW-Registration No.: DV-8601AU2248

Please turn over for important information regarding application of our products.

FRIALEN® T-Pieces TA (KIT) with extra long outlet spigot in kit version; coupler MB with removeable center stop included and **FRIALEN**® T-Pieces reduced TA red with extra long outlet spigot

Areas of Application

The FRIALEN-T pieces TA (KIT) and FRIALEN-T pieces TA red are used for pipe outlets of HDPE pipelines.

Assembly Instructions

The fusion of the pipe ends with the FRIALEN-TA or with the FRIALEN-TA red, takes place by FRIALEN-fusing – leakproof and longitudinally strong.

The pipe ends are prepared (removing the oxide skin/ cleaning) according to the general installation instructions (see “Assembly Instructions” for “FRIALEN-Safety Fittings for house connections and distribution pipes up to d 225”).

Eleven good reasons for using the FRIALEN-TA (KIT) and FRIALEN-TA red:

- **Large coupler depth for ease of pipe guiding (no holding clamps required)**
- **Length of outlet spigot dimensioned for two fusion operations**
- **Extra wide fusion zones**
- **Maximum stability through great wall thickness**
- **Cold zones at the front side and in the middle of the coupler**
- **Exposed heating coil for direct heat transmission to the pipe**
- **Small annular gap for build-up of optimum joining pressure in the fusion zone**
- **Touch proof electric contacts**
- **Durable batch marking**
- **Individually wrapped for dirt protection**
- **Additional barcode for tracing back the fitting (Traceability-Coding)**

For further information, please call our customer service staff and specialist advisers.

FRIATEC Aktiengesellschaft · Technical Plastics Division
P.O.B. 71 02 61 · D-68222 Mannheim
Telephone +49 621 486-1431 · Telefax +49 621 479196
www.friatec.com · E-Mail: info-frialen@friatec.de

Please find our datasheets for downloading on the internet at **www.frialen.com**

FRIATEC
an Aliaxis company