FRIALEN®

FRIALEN®-Pressure Tapping Tees Top-Loading DAA-TL and Top-Loading/Relining DAA-TL/RE

*PE 100 SDR 11 / *PE 100 SDR 17*

Maximum working pressure 16 bar (Water) / 10 bar (Gas)

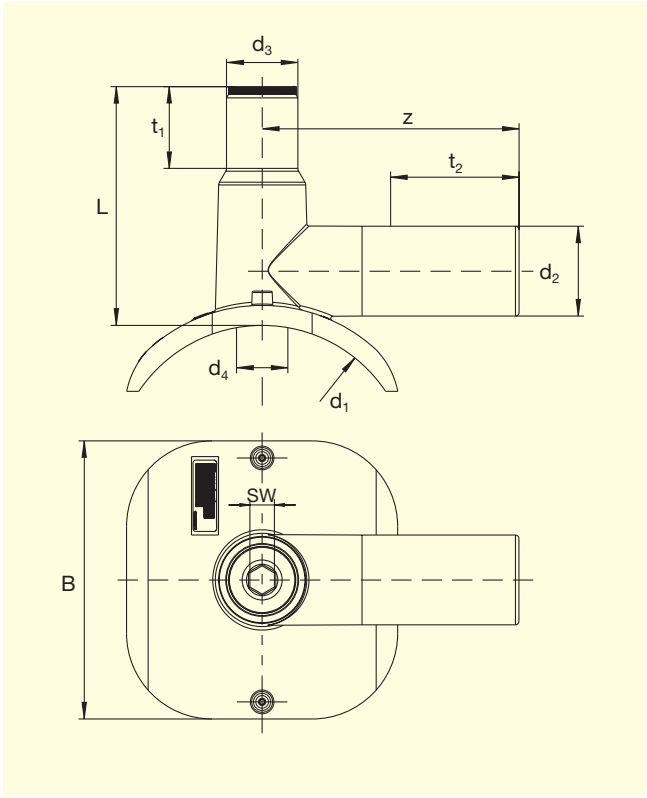



d_1	d_2	Order Ref.	Stock-status	VE	PE	d_3	L	z	t_1	t_2	B	SW	Drilling Ø d_4	Weight kg/each
> 98-130	50	T-615 527	2	20	160	50	125	152	59	105	100	19	30	0.804
> 130-160	50	T-615 528	2	12	96	50	121	162	58	102	180	19	30	1.041
> 160-210	63①	T-615 531	2	5	90	50	167	180	58	118	195	19	30	1.229
250-315② (400)	63①	T-615 339	1	5	90	50	167	180	58	118	195	19	30	1.416

FRIALEN®-Pressure Tapping Tees DAA-TL and DAA-TL/RE can be used for pipes of SDR stages 11 to 17.6

① Other outlet dimensions with electrofusion reducers MR

② d1 up to 400 for pipes SDR 17

DVGW-Registration Nos.: DV-8606AU 2249 and DV-8611AU 2250

Please turn over for important information regarding application of the **FRIALEN®**-Pressure Tapping Tees DAA-TL and DAA-TL/RE.

FRIATEC

FRIALEN®-Pressure Tapping Tees Top-Loading DAA-TL and Top-Loading/Relining DAA-TL/RE

PE 100 SDR 11

Maximum working pressure 16 bar (Water) / 10 bar (Gas)

Areas of Application

The FRIALEN®-DAA-TL and DAA-TL/RE Pressure Tapping Tees are used for branches of unpressurised and pressurised pipelines for variable adaption to all pipe diameters in the given range.

Outlet spigots prepared for receiving gas flow controllers. Dimensions on request.

Assembly Instructions

The fusion of the HDPE distribution pipes and the house connections with FRIALEN®-Pressure Tapping Tees takes place by FRIALEN®-fusing – leakproof and longitudinally strong.

The saddle and the outlet spigot have to be prepared according to the general installation instructions (see “Assembly Instructions” for “FRIALEN®-Safety Fittings for house connections and distribution pipes up to d 225” and “FRIALEN®-Special Technology for laying large bore pipes and relining pipe networks”). This involves removing the oxide skin and cleaning the pipe covered by the saddle as well as the outlet spigot and the pipe end.

Component is clamped onto the pipe using the FRIALEN® clamping device FRIATOP.

Fourteen good reasons for using the FRIALEN®-DAA-TL and DAA-TL/RE

- **Compact construction**
- **Safe clamping of component using the FRIATOP clamping unit**
- **Preassembled unit without loose parts**
- **Leakage check possible before tapping**
- **Swarfless tapping**
- **Leakage-free tapping of gas pipe up to 10 bar working pressure**
- **Little force required for tapping**
- **Punched-out pipe piece fits securely in drill**
- **Drill guided in metal sleeve**
- **Drill with upper and lower stop**
- **Extra wide fusion zone**
- **Dome can be fused with cap after tapping**
- **Length of outlet spigot dimensioned for two fusion operations**
- **Additional barcode for tracing back the underground fitting (Traceability-Coding).**

Please find our datasheets for downloading on the internet at www.friatec.de

For further information, please call our FRIALEN® customer service staff and specialist advisers.

FRIATEC Aktiengesellschaft · Technical Plastics Division
P.O.B. 71 02 61 · D-68222 Mannheim
Telephone +49 621 486-0 · Telefax +49 621 479196
www.friatec.de · E-Mail: info-frialen@friatec.de

FRIATEC
an Aliaxis company

2157e/9