FRIALEN® Shut off Saddles SPA



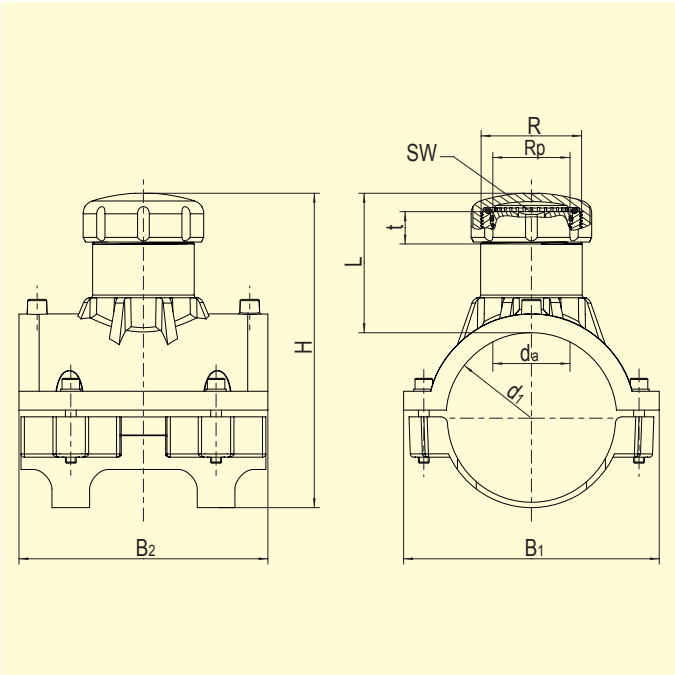

PE 100 SDR 11
Maximum working pressure 16 bar (water)/10 bar (gas)

d_1	R	Rp	Order Ref.	Stock-status	BX	PU	L	t	B_1	B_2	H	SW	Drilling Ø d_a	Weight kg/each
63	G 1 1/2	G 1 1/8	**612753** ①	1	20	360	76	19	108	118	146	19	31,0	0,610
90	G 2 1/2	G 2	**612677**	1	16	128	104	24	156	150	197	19	56,5	1,472
110	G 2 1/2	G 2	**612750**	1	12	96	104	24	178	180	217	19	56,5	1,630
125	G 2 1/2	G 2	**612751**	1	12	96	104	24	190	185	232	19	56,5	1,800
160	G 2 1/2	G 2	**612752**	1	8	64	104	24	230	195	267	19	56,5	1,940
180	G 2 1/2	G 2	**612754**	1	7	56	104	24	235	195	287	19	56,5	1,950
200	G 2 1/2	G 2	**612755**	1	6	48	104	24	252	193	307	19	56,5	1,944
225	G 2 1/2	G 2	**612756**	1	5	40	104	24	258	193	332	19	56,5	1,964

FRIALEN-Shut off Saddles from d 90 can be fused to pipes of SDR stages 11 to 17.6.
Other SDR-stages on request. Please observe the marking directly at the product, which is mandatory.
DVGW-Registration No.: DV-8601AU2248, DV-8606AU2249

① Shut off Saddles d 63 may only be processed using pipes up to SDR 11.

Please turn over for important information regarding application of our products.

FRIALEN® Shut off Saddles SPA

Areas of Application

FRIALEN-Shut off Saddles SPA are suitable for blocking media by the use of commercial shut off equipment or for vending/flushing.

Assembly Instructions

The fusion of the HDPE mains and the FRIALEN-Shut off Saddle takes place by FRIALEN-fusing – leakproof and longitudinally strong.

The pipe and the saddle have to be prepared according to the general installation instructions (see “Assembly Instructions” for “FRIALEN-Safety Fittings for house connections and distribution pipes up to d225”). This involves removing the oxide skin and cleaning the pipe covered by the saddle.

Nine good reasons for using the FRIALEN-Shut off Saddles SPA:

- **Compact construction**
- **HDPE saddle with exposed heating element for optimal heat transfer**
- **Compact part suitable for normal commercial shut off equipment and for tapping of the main-pipe**
- **Long and solid brass-external thread for a safe connection of the shut off equipment**
- **Brass-internal thread for a safe sealing by using a plug, permanently and immovable anchored in the HDPE**
- **Includes brass plugs with square recess**
- **Protection against access to the dome by fusing on a FRIALEN SPAK or K**
- **DVGW registered**
- **Additional barcode for tracing back the underground fitting (Traceability-Coding)**

For further information, please call our customer service staff and specialist advisers.

FRIATEC Aktiengesellschaft · Technical Plastics Division
P.O.B. 71 02 61 · D-68222 Mannheim
Telephone +49 621 486-1431 · Telefax +49 621 479196
www.friatec.com · E-Mail: info-frialen@friatec.de

Please find our datasheets for downloading on the internet at **www.friatec.com**

FRIATEC

an Aliaxis company