FRIALEN®

FRIALEN®-Universal Adapter
HD-PE/brass UAM
with female thread (Spigot fittings)
PE 100 SDR 11

Maximum working pressure 16 bar (water) / 5 bar (gas)

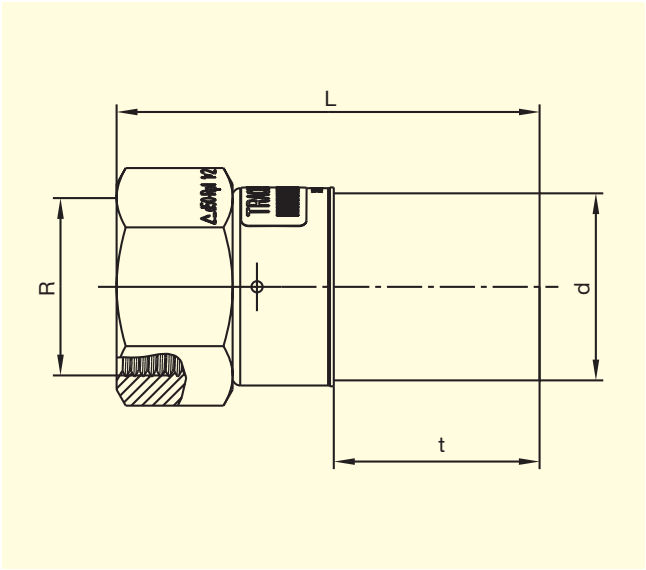



d	Rp①	Order Ref.	Stock-status	VE	PE	t	L	SW	Weight kg/each
32	1″	T-616 156	1	30	2.700	73.5	120.5	41	0.270
40	1¼″	T-616 157	1	20	1.800	78.5	133.5	50	0.440
50	1½″	T-616 158	1	16	1.440	55	113	55	0.530
63	2″	T-616 159	1	12	600	63	128	70	0.910

① Other thread dimensions on request

Please turn over for important information regarding application of the **FRIALEN®**-Universal-Adapter UAM

FRIATEC

FRIALEN®-Universal Adapter
HD-PE/brass UAM
with female thread (Spigot fittings)
PE 100 SDR 11

Maximum working pressure 16 bar (water) / 5 bar (gas)

Area of Application

The FRIALEN® Universal Adapter UAM serves to connect metal construction parts which have a screwed connection e.g. valves with an HD-PE connection pipe. For gas and water supply or for industrial applications. The version with PE spigot end allows for assembly regardless of location and the homongenous fusion connection with all suitable FRIALEN® moulded parts, e.g. FRIALEN® UB/MB couplers, FRIALEN® elbows W45° to W90°, etc.

Assembly Instructions

Usually the screw connection needs to be assembled first as assembly related torsion forces should not bear down on the connected PE pipe. The tightening forces must be introduced via the specially designed wrench area.

Fusion of the PE spigot end takes place using FRIALEN® couplers or moulded parts and the FRIALEN® fusion process – tight and with axial force.

Please observe the general assembly requirements (see “adapters with thread connection” in “Installation instrucions for FRIALEN® safety fittings for service and distribution lines up to d225” (remove oxidic layer from pipe / clean, etc.).

Eleven good reasons for the FRIALEN® universal adapter UAM

- **Compact instruction**
- **PE 100 spigot end – quality controlled**
- **Tested and quality controlled brass quality**
- **Assembly regardless of location, high degree of flexibility due to separate fusion of PE spigot end**
- **May be used with all FRIALEN couplers and moulded parts of identical dimensions**
- **Universal combination option with the FRIALEN range**
- **HD-PE side with weld-on end for processing without holding device, designed for FRIALEN coupler moulded parts**
- **Pull-proof connection**
- **Brass side tightly connected with PE spigot end, safe from distortion**
- **Barcode for traceability of component (traceability coding)**
- **Oxidic layer may be removed from PE spigot end using scraper tools**

Please find our datasheets for downloading on the internet at www.friatec.de

For further information, please call our FRIALEN® customer service staff and specialist advisers.

FRIATEC Aktiengesellschaft · Technical Plastics Division
P.O.B. 71 02 61 · D-68222 Mannheim
Telephone +49 621 486-0 · Telefax +49 621 479196
www.friatec.de · E-Mail: info-frialen@friatec.de

FRIATEC
an Aliaxis company

2343e · Stand 21.10.2004