FRIALEN®

FRIALEN® UFLG Transition Fittings

HDPE/copper
for pipe systems – liquid gas transmission in gaseous state

PE 100 SDR 11

Maximum working pressure 5 bar (gas)

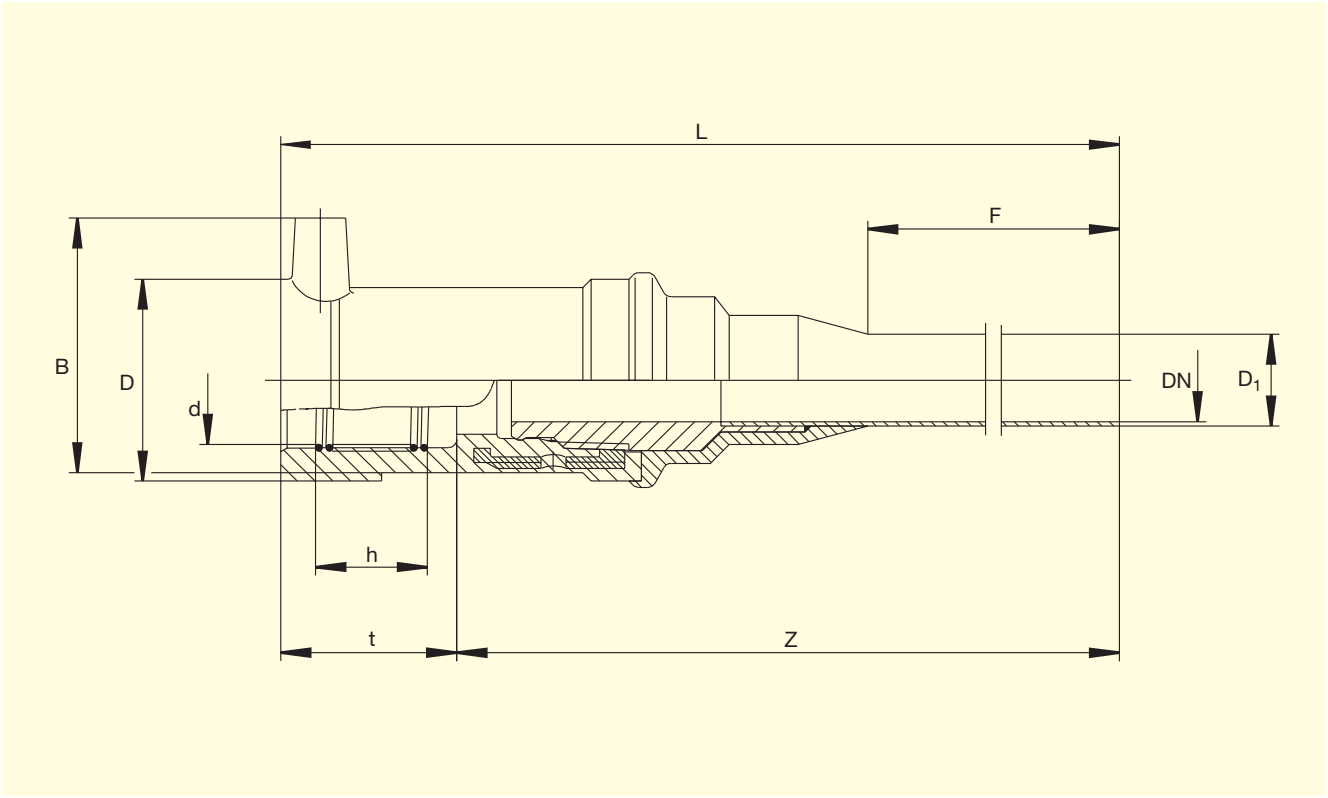

d/DN	Order Ref.	Stock-status	VE	PE	D	D1	L	F	h	t	Z	B	Weight kg/each
32/20	T-615 733	1	25	750	48.5	22	340	200	24	44	296	61	0.510

FRIALEN®-Safety Fittings can be fused to pipes of SDR stages 11 to 17.6
DVGW-Registration No: DV-7501AU2256

Please turn over for important information regarding application of **FRIALEN®** UFLG Transition Fittings.

FRIATEC

FRIALEN® UFLG Transition Fittings

HDPE/copper
for pipe systems – liquid gas transmission in gaseous state

PE 100 SDR 11

Maximum working pressure 5 bar (gas)

Areas of Application

The FRIALEN® UFLG Transition Fitting is applied for material transmission in domestic pipe systems of liquid gas public utilities which are used to run consumer plants in the gaseous phase.

According to DVFG requirements (note TRF 1996-1, 5.4.6.1.1) the FRIALEN® Transition Fitting is designed to provide an insoluble connection for earthed pipe connections.

The FRIALEN® UFLG Transition Fitting complies with DVGW work sheet G 477 and can be applied in low and medium pressure areas of up to maximum operating pressure of 4 bar (PN 4).

A certificate (DVGW registration No DV-7501AU2256) exists for the FRIALEN® UFLG Transition Fitting. A test certificate can be made available on request.

Assembly Instructions

Jointing of FRIALEN® UFLG Transition fitting with PE-HD pipes d 32 takes place according to DIN 8074/75 using axial force with an integrated heating coil fusing coupler.

The copper pipe system is connected by hard-soldering (coupler soldering) with the copper pipe socket, SF Cu-F25, DIN 1787 measuring d 22 x 1.0 mm of the FRIALEN® UFLG Transition Fitting. Appropriate reducing fittings are used for other pipe measurements.

Four good reasons for using the FRIALEN® UFLG Transition Fitting:

- **The FRIALEN® UFLG Transition Fitting is a problem solver for providing a connection with axial force on the PE side and thus complies with current rules.**

In addition, the UFLG offers all other tried-and-tested advantages of FRIALEN® Transition Fittings:

- **Self-sealing, patented sealing geometry without elastomeric sealing.**
- **PE side with integrated heating conductors, extra wide fusion zone and large insertion depth for safe fusion.**
- **Additional barcode for tracing back the underground fitting (Traceability-Coding).**

Please find our datasheets for downloading on the internet at www.friatec.de

For further information, please call our FRIALEN® customer service staff and specialist advisers.

FRIATEC Aktiengesellschaft · Technical Plastics Division
P.O.B. 71 02 61 · D-68222 Mannheim
Telephone +49 621 486-0 · Telefax +49 621 479196
www.friatec.de · E-Mail: info-frialen@friatec.de

FRIATEC
an Aliaxis company

2187e/1