pipe identical

FRIALEN®

FRIALEN®-Ball Valves KH made from HDPE

1/4 rotation with pipe identical passage

PE 100 SDR 11

Maximum operating pressure 16 bar (water) / 10 bar (gas)

KH

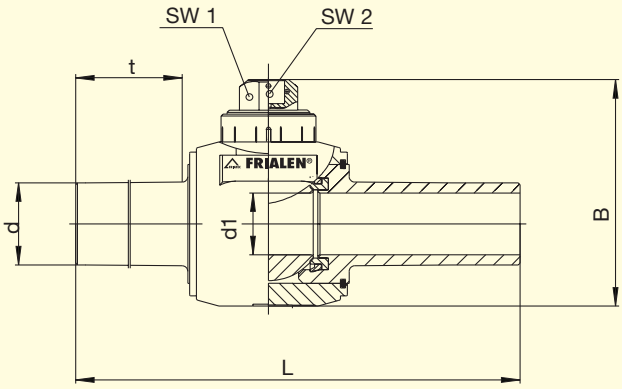

BS

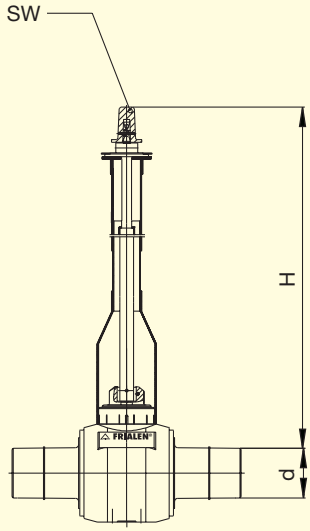

KH

d	d_1	Order Ref.	Stock-status	VE	PE	t	B	L	Ext. Square SW 1	Intern. Square SW 2	Weight kg/each
32	25	T-616 176	1	1	-	109	156	324	50 x 50	19	0.770
40	31	T-616 177	1	1	-	109	156	324	50 x 50	19	0.780
50	37	T-616 178	1	1	-	120	193	405	50 x 50	25	2.240
63	50	T-616 179	1	1	-	126	206	411	50 x 50	25	2.415
90	71	T-616 180	1	1	-	180	288	574	50 x 50	25	6.580
110	87	T-616 181	1	1	-	180	288	574	50 x 50	25	6.740
125	99	T-616 182	1	1	-	180	288	574	50 x 50	25	6.900

BS assembly sets for ball valves

d (KH)	d (BS)	Valve Cover (H in m)	Order Ref.	Stock-status	VE	PE	SW	Weight kg/each
32-40	32-50	0.45-0.7	T-615 741	1	1	42	30	2.400
32-40	32-50	0.6-1.0	T-615 957	1	1	42	14	1.700
32-40	32-50	0.6-1.0	T-615 328	1	1	42	30	2.850
32-40	32-50	1.0-1.5	T-615 330	1	1	42	30	3.800
32-40	32-50	1.2-2.0	T-616 068	2	1	42	14	3.300
32-40	32-50	1.2-2.0	T-615 329	2	1	42	30	4.600
50-125	63-225	0.6-1.0	T-615 958	1	1	42	14	1.700
50-125	63-225	0.6-1.0	T-615 310	1	1	42	30	3.650
50-125	63-225	1.0-1.5	T-615 331	1	1	42	30	4.760
50-125	63-225	1.2-2.0	T-616 069	2	1	42	14	3.450
50-125	63-225	1.2-2.0	T-615 311	2	1	42	30	5.990

DVGW-Registration Nos.: DG-8631AU2251 and DG-8631AU2252

Please turn over for important information regarding application of **FRIALEN®** ball valves.

FRIATEC

FRIALEN®-Ball Valves KH made from HDPE

1/4 rotation with pipe identical passage

PE 100 SDR 11

Maximum operating pressure 16 bar (water) / 10 bar (gas)

Areas of Application

The FRIALEN®-Ball Valve is used as a shut-off fitting in gas and water supply pipes, compressed sewage, mineral and sea water, and compressed air pipes. Further media on request.

The passage of the valve (d1) corresponds approx. with the internal diameter of the pipe socket SDR without constriction.

Opening and closing the FRIALEN®-Ball Valve takes place by 1/4 turn with the actuator. The FRIALEN® Installation Kit BS allows operation from street cover and has been adapted to the ball valve in the best possible way.

Advice on Processing

The FRIALEN®-Ball Valve is connected by pure HDPE weld-on ends via FRIALEN® Couplers, Elbows or T-pieces with the HDPE pipe through FRIALEN® fusion – leakproof and longitudinally strong.

The ends to be fused are prepared according to the general installation instructions (see "Assembly Instructions" for "FRIALEN®-Safety Fittings for house connections and distribution pipes up to d 225"). This involves removing the oxide skin and cleaning the pipe ends. Before fusion the FRIALEN®-Ball Valve KH must be lined up to suit the type of actuation intended, in order to ensure that the installation kit BS will seat correctly.

Twelve good reasons for the FRIALEN®-Ball Valve KH

- **The FRIALEN®-Ball Valve provides a completely fused HDPE pipe network, without transitions to other materials or flange connections**
- **Optimum hydraulics due to pipe identical passage and contour providing ease of flow**
- **Good testability due to lack of constriction of internal diameter**
- **Not sensitive to bending stress, as floating ball, axial tightness in ball pivot and meeting point of ball guidance and seal are all in one part**
- **No deposits on internal areas, resistant to chemical and electrical reactions**
- **No time consuming or expensive insulation work**
- **Low activating element**
- **Low weight, compact construction**
- **Extra long outlet spigots dimensioned for 2 fusion operations**
- **Open and closed settings with defined and solid end position**
- **Activation via telescopic BS assembly set**
- **Additional barcode for tracing back the underground fitting (Traceability-Coding).**

Please find our datasheets for downloading on the internet at www.friatec.de

For further information, please call our FRIALEN® customer service staff and specialist advisers.

FRIATEC Aktiengesellschaft · Technical Plastics Division
P.O.B. 71 02 61 · D-68222 Mannheim
Telephone +49 621 486-0 · Telefax +49 621 479196
www.friatec.de · E-Mail: info-frialen@friatec.de

FRIATEC
an Aliaxis company

2326e/1