RevNo	Revision note	Date	Signature	Checked

DETALLE TRAMO RECTO

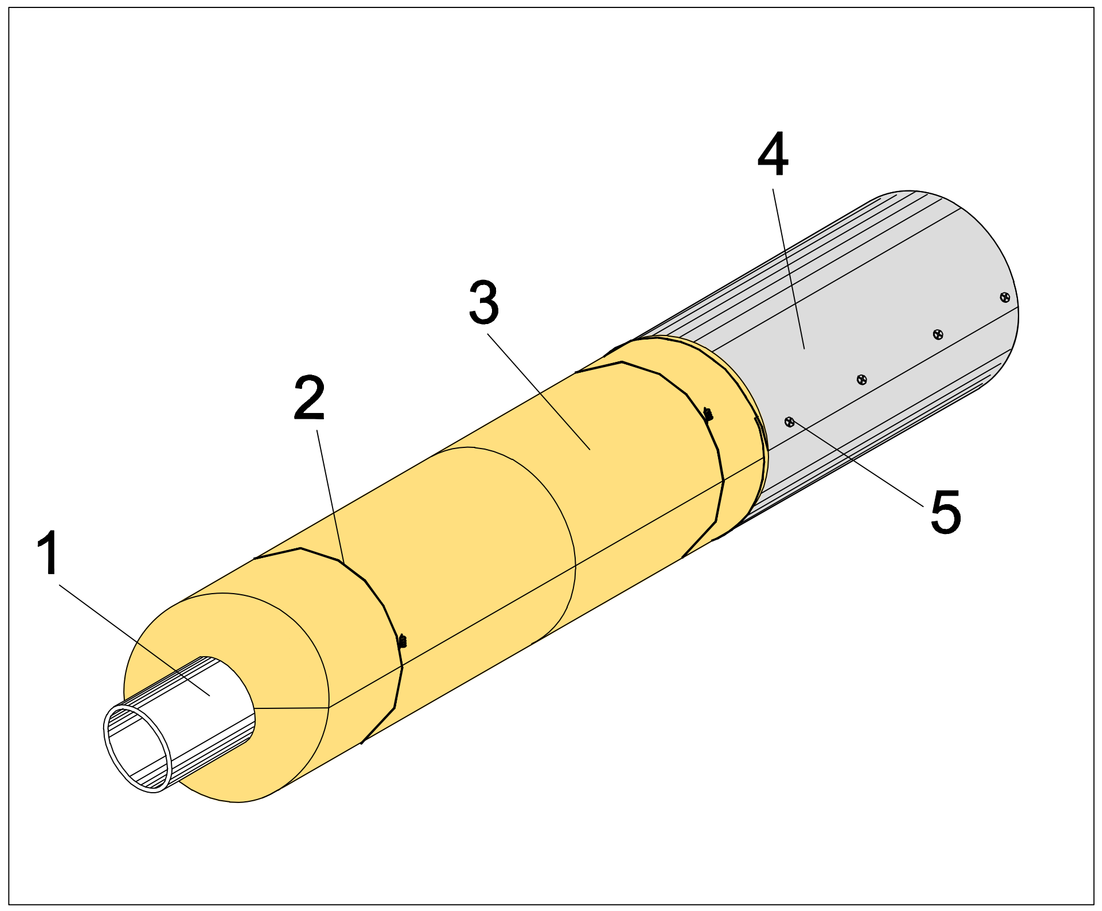

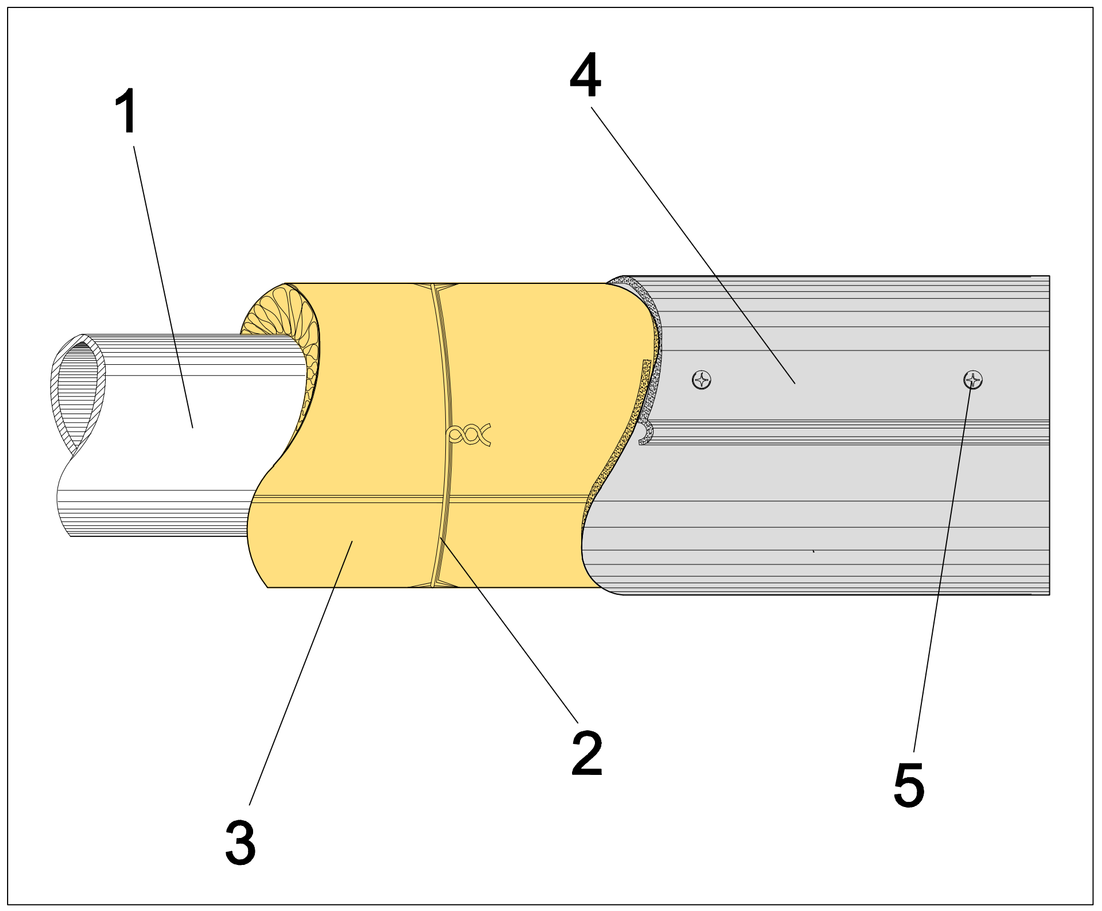

1 - TUBERÍA.
2- LAZADA DE ALAMBRE.
3- COQUILLA DE LANA MINERAL ISOVER.
4- REVESTIMIENTO.
5- TORNILLO ROSCA

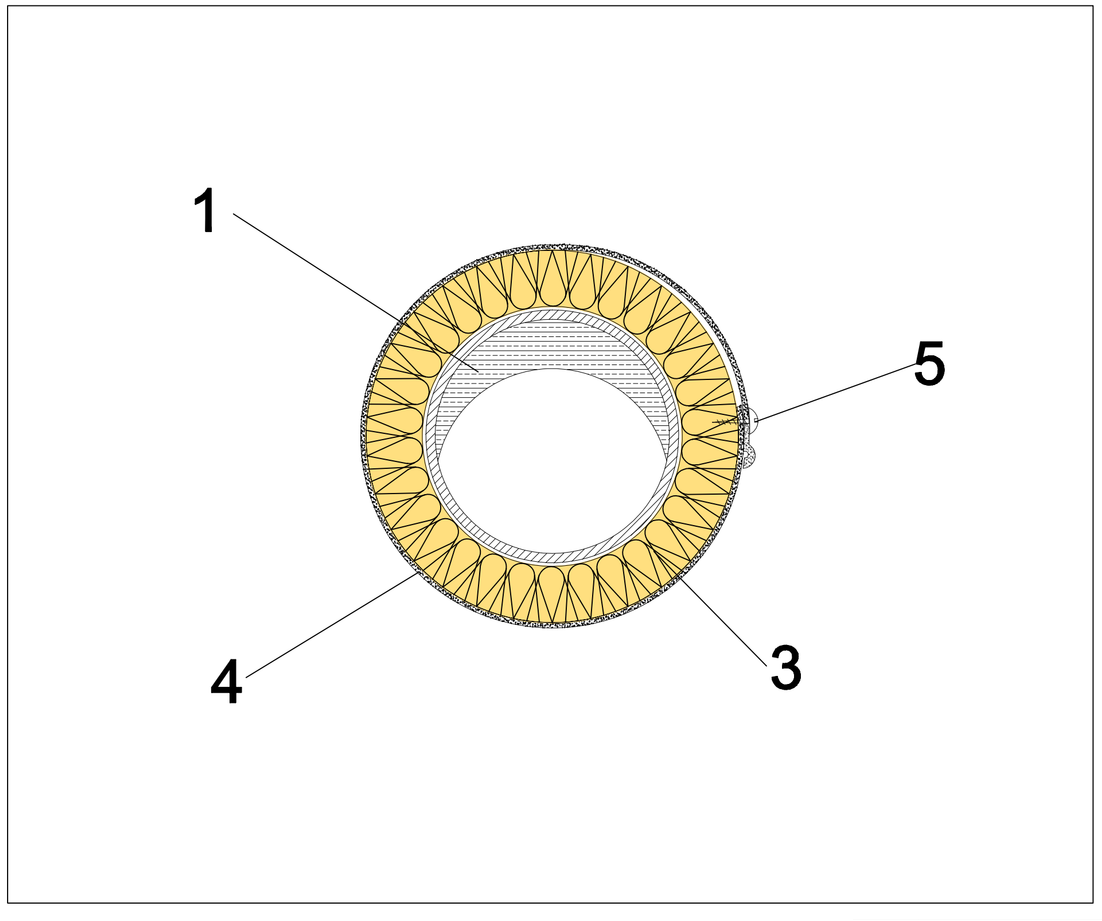

Itemref	Quantity	Title/Name, designation, material, dimension etc			Article No./Reference	
Designed by A.R.S.		Checked by N.B.P. y F.P.H.	Approved by - date DTC - 28/06/11	Filename COQUILLAS	Date 20/06/11	Scale
SG ISOVER		COQUILLAS				
		1			Edition 0	Sheet 1/1