

IN THIS ISSUE

CITY REPORT
Paris

PROJECT
MACDONALD
WAREHOUSE
Catalyst for
change

#18
Architectural Magazine
by Reynaers Aluminium

DOMINION TOWER
The space of flying

"Glass is abundant in this building; not only on the inside, but also on the outside"

REPORT

REYNAERS
aluminium

#18

Edition Spring 2016

Publisher responsible:
Birgit Huybrechs
Production:
A10 Publishers B.V.

IN THIS ISSUE

CITY REPORT



4 PARIS (FR)
History - Towards the 'shared Metropolis'
Morphology - Architecture between growth rings
Interview - Reinventing Paris
Developments - Paris becoming greater

PREVIEW



14
Black Forest (CN)
KULAB (BE)
Swarovski Sparkle Towers (UAE)
Ceres Tower (CH)
Tykhe Hotel (AO)

PROJECTS

18 MACDONALD WAREHOUSE (FR)
Catalyst for change





28 DOMINION TOWER (RU)
The space of flying



38 CRYSTAL (CZ)
Chessboard-like crystal



48 JOIE DE VIVRE HOUSE (USA)
Transparent Home

INNOVATIONS



56
MasterLine 8 window to the future, **Reynaflow** smart manufacturing solution

REFERENCES

62
Office building at Postępu 14 (PL), Enjoy Concrete (BE), Bunkowski Residence (USA), China Corporate United Pavilion Expo Milano 2015 (IT), Kingston Heights (UK), Corda Campus (BE), Restaurant Royal Beach (RU), Musa Katendrecht (NL), Campus University Aalborg (DK), Marasa Sarovar Hotel (IN), Villa Snagov (RO), Loanda Towers (AO)



TIME FOR TRANSITION

Paris speaks to the imagination of people all over the world. The capital is known as one of the most visited cities in the world where tourists and business people are attracted by its rich cultural and architectural heritage and its intense economic activity. Even though it has the attitude of a metropolis, Paris evokes feelings of warmth and belonging.

After the unimaginable terrorist attacks in November 2015, great efforts are made to make sure that the City of Lights remains a vibrant and multicultural environment that looks ahead to the future. Paris is at the start of a transition towards a 'shared Metropolis' that will foster better coherence between the centre and the periphery. The city's increasing population in combination with the lack of space asks for major urban developments. A great example of this is the repurposing of the Macdonald Warehouse into a new micro-urban complex with 1126 homes, as well as offices, schools and retail stores. This complex will transform 'Paris Nord-Est' from a neglected area into a dynamic and desirable place.

Paris is rapidly evolving and so is Reynaers Aluminium. In this increasingly digital world, Reynaers applies the latest digital technologies in order to respond to our partners' highest requirements. For instance, a brand new experience centre and a virtual reality projection room are being installed in our headquarters in Duffel. This centre allows our partners to experience the integration of our solutions in their designs. One of these solutions is MasterLine 8, the next generation of window and door systems that offers different design and insulation variants in only one system for ultimate flexibility.

In this context, I am glad to announce that Report is at the start of a transition as well. In the future, Report will no longer inspire you as a print magazine, but as an elaborate online database. This way we will continuously inform you about remarkable projects and innovations and enable you to easily search for projects and solutions online.

All these pioneering transitions take Reynaers and our partners to a new and future-oriented era. For now, enjoy this new edition of Report.

Martine Reynaers



PARIS (FR)

DEMOGRAPHY

- City: 2.24 million inhabitants, region: 12 million (18% of the French population)
- People aged 15-29 and 30-44 years represent the largest percentage (over 23% for each category) of the Parisian population
- The area is 1,054 km^2
- 21,258 residents per km^2

BUILDING SECTOR

- Almost 10,000 architects (1/3 of all French architects) are concentrated in Paris and its region
- 121,000 active construction companies
- Building permits for 65,700 residential units issued in the Paris region (October 2014 - October 2015)
- Construction of 60,400 residential units started in the Paris region (October 2014 - October 2015)
- 9,700 apartments were built in Paris in 2014

LOCATION





HOUSING
- 1.36 million homes
- Average floor space of an apartment is 43 m^2
- 1.3 million Parisians living in apartments
- 13,000 Parisians living in single-family houses
- one in three Parisian families owns their own apartment
- Average price for an apartment: 8,420 euros/m^2

EDUCATION
- 17 universities in Paris and its region
- 7 architecture schools
- 369,200 university students in 2014-2015
- 646,172 higher educated students in 2014-2015
- 26.6% of all French students are concentrated in the Paris region
- Average floor space of a student residence is 18m^2

ECONOMY
- 6.09 million people employed in Paris and its region
- 35,165 new businesses were created in 2015
- Over 80% of the population is working in retail, transportation and services
- 22.4 million hotel arrivals in the Paris region in 2014

Paris and its region constitute 2% of the country's territory and contribute 30% to its GDP (as of 2012). In 2014, Forbes ranked Paris as the world's third capital preferred by investors, the Greater Paris project making the city particularly attractive.

TOWARDS THE ‘SHARED METROPOLIS’



A Gallic settlement founded in the third century BC, then a Roman city renamed as Parisius in the fourth century AC, the capital of the Franks since 508 and that of France by the end of the twelfth century – Paris has evolved from a remote town in a Roman province to the country’s most prosperous city, home to one of the oldest universities in the world, and finally, a global economic and cultural hub in which everything that is typically French coexists with the attitude of a world city; a metropolis.

Text **Anna Yudina** Photography **Getty Images**

Largely shaped by fortifications and city walls, since the 17th century the concentric expansion of Paris has been gradually gaining connectivity. The Avenue du Palais des Tuileries (the future Champs-Elysées) built by Louis XIV served to connect Paris to Versailles. The 1794 'Artists' Plan' suggested tracing thoroughfares and squares across existing city blocks. And in the industrial age, the growing necessity to transport people, materials, and goods resulted in the creation of three canals and the first railway line. The construction of railways prompted the emergence of new neighbourhoods with railway stations at their centres, but also led to the segregation between residential areas and infrastructural and industrial enclaves – those that became the object of breakthrough urban renewal initiatives in recent years, such as the Paris Nord-Est sector and notably the Macdonald Warehouse (see pages 18-27).

"THE SO-CALLED 'HAUSSMANNISATION' HAS LARGELY DEFINED THE IMAGE OF PARIS AS WE KNOW IT"

Unprecedented modernisation took place between 1852 and 1870 at the hands of the Prefect of the Seine, Baron Haussmann, commissioned by Napoleon III. The so-called 'Haussmannisation' has largely defined the image of Paris as we know it. Cutting new streets through densely built-up quarters. Haussmann intended to embellish the city by creating vistas; replace unwholesome alleyways with straight, wide streets offering air and light, thus improving public health; and facilitate defence against street riots.

Another consideration was easy access to and from railway stations, so that travellers were guided 'straight to the centres of commerce and pleasure' without congestion or accidents. Engineer Eugène Belgrand constructed an enormous sewer system and the aqueducts, which finally brought sufficient water into Paris. A far-sighted decision was made to incorporate the suburbs into the city, thus increasing its territory by more than half.

ARCHITECTURE FOR URBAN PROGRESS

The nineteenth century gave Paris some of history's most brilliant minds that unified architecture and engineering. These included Henri Labrouste whose National Library influenced the future of architecture. The first large public market was built in Paris, as well as the first modern department store, Le Bon Marché, constructed by Gustave Eiffel. The World's Fairs formed the origins of the Eiffel tower, built in 1889, and triggered the engineering feats in the glass-and-iron designs of the 'Machine galleries'. The rise of affordable housing is another chapter of Paris's history that started at that time. With the first social housing law adopted in 1894, the mission was continued in the early 1900s by Louis Bonnier and Paul Juillerat, who sought to offer an alternative to the unhealthy living conditions of the time. The development of inexpensive prefabricated construction elements gave rise to large residential complexes. Built between the 1950s and 1973 on the outskirts of the capital, they provided decent homes to thousands of underprivileged people, but the isolation of these complexes created a host of social problems, which Paris is still trying to resolve. The city is rehabilitating isolated areas; expanding and upgrading its transport networks, and also seeking to overcome ghettoisation through social diversity as it builds mixed developments in all of its districts.

In the 1960s to 1970s, Paris underwent a series of urban experiments based on modernist concepts, such as the partly completed plan of demolishing peripheral districts to replace them with modern, rational projects. Five 'new cities' were built around Paris with the objective of decongesting the capital. Designed as an amalgam of city and nature and equipped with large public facilities, they were not equal to the city's hopes and are now being revisited within the Greater Paris project – an extraordinary undertaking that fosters better coherence between the centre and the periphery to create a 'shared Metropolis' (see Developments, page 12-13). ■

ARCHITECTURE BETWEEN GROWTH RINGS

For centuries, Paris controlled its growth by constructing walls. Their traces can still be seen in the urban fabric and so integrate a millennium of architectural history.

Text **Anna Yudina** Photography **Wikipedia**

The Grands Boulevards trace Paris' oldest city wall which dates to 1190-1220. Overground metro lines 2 and 6 loosely correspond to the 18th-century tax collecting wall, while the city's last fortifications, erected in the 1840s, are echoed by the Boulevards of the Marshals. In the Greater Paris region, the Périphérique beltway too, should cease being a border, and many of the formerly neglected spots will become a must-visit. ■

01. Notre-Dame de Paris Cathedral, 1163-1345. Architects: Jehan de Chelles, Pierre de Montreuil, Pierre de Chelles, Jean Ravy, Jean le Bouteiller, Raymond du Temple

02. The Louvre, 1190-1202 (Medieval castle); 1528-56 (Renaissance palace); continuous transformations throughout the 17th and 19th centuries; 1989. Architects: Pierre Lescot (16th century); Jacques Lemercier, Louis Le Vau, Claude Perrault (17th century); Pierre Fontaine, Charles Percier, Félix Duban, Louis Visconti, Emile Trélat, Hector-Martin Lefuel (19th century); Ieoh Ming Pei (20th century).

03. Place des Vosges, 1605-'12. Architects: supposedly, Jacques II Androuet du Cerceau, Louis Métezeau, Clément Métezeau or Claude Chastillon

04. Palais Royal, 1633-'39. Architect: Jacques Lemercier. Landscape designer: Pierre Desgotz, the royal gardener

05. Pantheon, 1757-'90. Architects: Jacques-Germain Soufflot, Jean-Baptiste Rondelet

06. Eiffel Tower, 1889. Engineers/architects: Gustave Eiffel, Maurice Koechlin, Emile Nouguier, Stephen Sauvestre

07. Grand Palais, 1900. Architects: Henri Deglane, Albert Louvet, Albert Thomas, Charles Girault (coordinator)

08. UNESCO Headquarters, 1958. Architects: Bernard Zehrfuss, Marcel Breuer, Pier Luigi Nervi


1


2

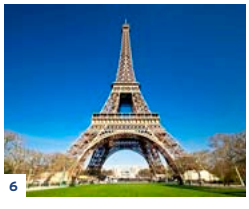
6


3


4


5


7

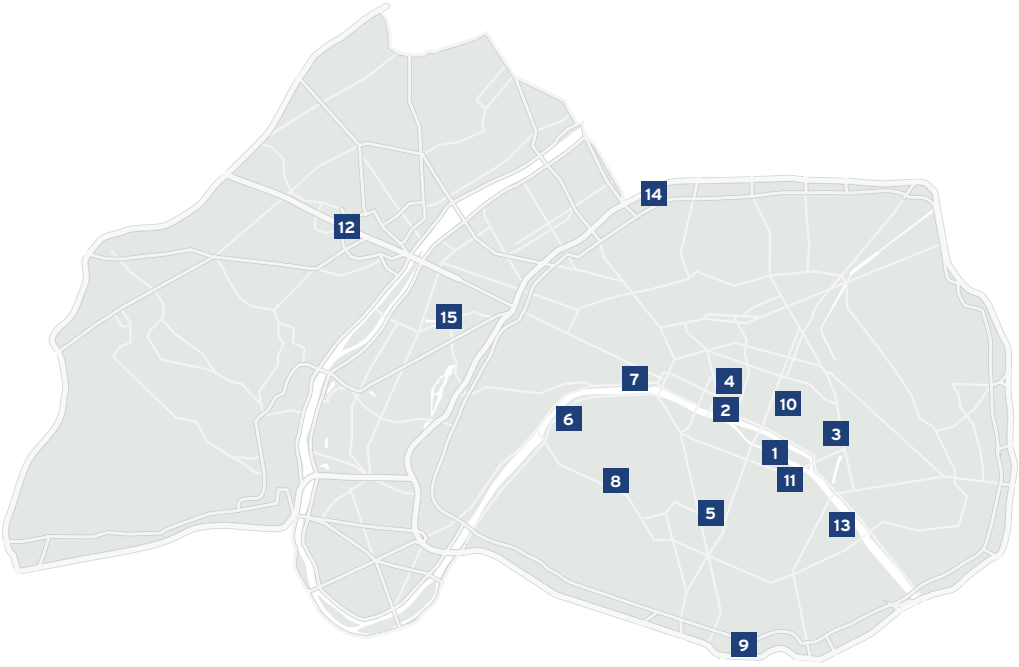

09. Maison du Brésil (Cité Universitaire), 1959. Architects: Le Corbusier, Lucio Costa

10. Centre Georges Pompidou, 1977. Architects: Renzo Piano, Richard Rogers, Gianfranco Franchini

11. Arab World Institute, 1987. Architects: Jean Nouvel, Gilbert Lézénès, Pierre Soria, Architecture Studio

12. Grande Arche de La Défense, 1989. Architects: Johan Otto von Spreckelsen, Paul Andreu. Engineer and co-author of the concept: Erik Reitzel

13. Les Docks – Cité de la Mode et du Design, 2010-'12. Architects: Jakob + MacFarlane

14. Rebière street, 2012-'13. Architects: Périphériques architectes (consulting architects). Michel Guthmann and TVK (coordinators). Raphaëlle Hondelatte & Mathieu Laporte, Atelier Bow-Wow, Stéphane Maupin & Partners Avignon-Clouet architectes, Atelier Provisoire, Bourbouze & Graindorge, EM2N, Brunnquell & André, Petitdidier Prioux Architectes, Rouselle & Laisné Architectes

15. Fondation Louis Vuitton, 2014. Architect: Frank Gehry


8


10


12


14


9


11


13


15

REINVENTING PARIS

Atelier Parisien d'Urbanisme (APUR, the Paris Urban Planning Agency) was created in 1967 with the mission of helping Paris to orientate its urban policy through analysing the evolution of the city and its population. Today, the agency supports the metropolis as it undergoes evolutionary and revolutionary developments. Report talks to Dominique Alba, Director of APUR since 2012.

Text **Anna Yudina** Photography **APUR**

The amount of data available is overwhelming. As observation and analysis are among APUR's key activities, what can you say about the potential it holds?

"We can use this data to develop new services or improve the existing ones, like in Milan where they have created a Geographic Information System to optimise the refuse collection circuit. APUR does not produce data itself but uses all available information to define subjects for case studies and comparative analyses. We recently mapped the neighbourhoods surrounding the future Grand Paris Express stations and made thematic comparisons based on six parameters. Using only existing data, we were able to investigate their structure and evolution, and assist the public policy-making process for the areas experiencing major changes thanks to the new stations to be built. We also explore smaller phenomena as potential tokens of change. We plan to team up with start-ups and receive their data on such things as shared accommodation, Airbnb, and Uber, to see whether this can be integrated into the city policy.

In our 'Paris 2050' map, which explores heating networks, we have put forward proposals for multiple small-scale interventions. If coordinated intelligently with urban systems, they will adapt Paris to climate change and make the city more sustainable. We have gone through stacks of documents about heating, electricity, and roof pumps to be able to devise relevant solutions."

The city of Paris envisages the construction of 10,000 flats every year. How is this going to be implemented?

"Not necessarily by building new square metres. We have 1.5 million square metres of offices that could be transformed into 20,000 apartments. The National Assembly has passed the law offering favourable tax conditions to those who convert offices into housing, and we organise work groups to brainstorm on possible solutions. The existing 95 million square metres of housing can be optimised. Finding a way to encourage people to put unoccupied flats on the market would already provide over 10,000 units. Constructing three to four storeys on some 2,500 corner lots creates another 25,000 units, while social housing stock can be increased through densification, like topping freestanding facilities with residential buildings."

How is the Parisian population evolving, and how should the city respond to this?

"The population has grown a great deal in recent years; now this growth is slowing down. Parisian women tend to have several children,

"IT'S NOT THE REGULATIONS BUT THE INTERACTION BETWEEN PEOPLE THAT SHOULD BE CHANGED"

Dominique Alba



but prefer to start their families later in life. With young, active people arriving in large numbers, the 15 to 35 year-old age bracket is overrepresented in Paris. We need to figure out their future expectations, and how tomorrow's public facilities should look. We have to provide kids with spaces in front of schools where they can mingle. The place of women is a real issue; in some suburbs and neighbourhoods you no longer see women in public spaces. While boys do sports in the street, girls spend their time in shopping centres. There should be places where girls can express themselves, like the 'Centquatre-Paris', where they can dance."

How will Paris be transformed in the coming years?

"In twenty years' time, the landscape of the two areas where the Seine enters Paris will be completely different. Parisian public spaces will no longer be exclusively designed 'around the car', but will evolve into multiuse areas with more trees and urban agriculture. Here, the city will provide basic amenities, like access to drinking water and electricity, allowing people to come and plug in. The banks of the Seine will be car-free. There will be collective projects co-designed by several architects. Interventions in the city fabric will become more flexible, and citizens will have their say in public projects. The Participatory Budget programme allows them to make choices about the allocation of 500 million euros during the Mayor's six year term."

Should the city modify its urban planning regulations to facilitate innovation?

"Entries submitted to the Reinventing. Paris competition (see Developments, page 12-13) did not require a single modification to existing norms, and yet it was the most innovative thing we've had in years. Architects and start-ups brainstormed with philosophers, and – quite extraordinarily – developers decided to maintain the teamwork practice, in which all actors put their heads together to propose the best programme for a given situation. It's not the regulations but the interaction between people that should be changed. Most importantly, Reinventing.Paris is becoming an attitude. Applying for a building permit in Paris, you will now be asked to demonstrate that your project is innovative. Things evolve; and, when the approach is intelligent, the city will adapt." ■

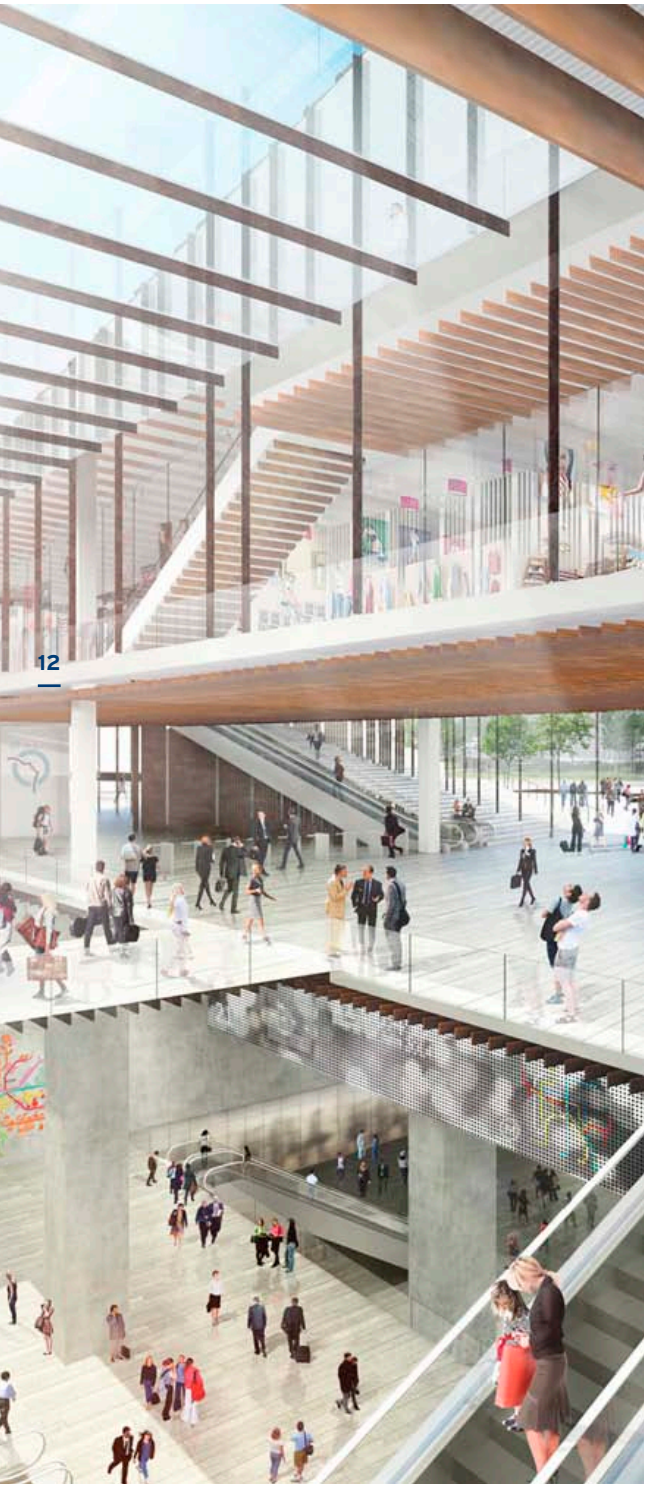

PARIS BECOMING GREATER

The transition from 'Paris and suburbs' to the Greater Paris Metropolis is official as of 1 January 2016. The 131 communes around Paris combine to form eleven 'territories,' capable of jointly developing large-scale projects. A few hundred new development zones have been scheduled to emerge across the metropolitan area. The rapid transit network, Grand Paris Express (MGPE), will dramatically improve overall accessibility and create opportunities for economic and social change.

Text **Anna Yudina** Illustration **Kengo Kuma and Associates**

↖

Artist impression of Saint-Denis-Pleyel, the largest of the 69 stations of the Grand Paris Express. It is created by the Japanese architect Kengo Kuma

Today, 45 minutes on the public transport available in Clichy-Montfermeil, located just 15 kilometres off Paris, won't get you anywhere near potential employment. The high speed network MGPE will bring you in 45 minutes to dynamic areas like La Defence, situated on the opposite side of the city. Reportedly, 130 international hospitality groups are seeking to open hotels in Paris, but are unable to find locations, while the suburbs have enough space but no demand. New metropolitan connectivity is likely to change that.

"In Paris and in any other commune, urban policy focuses on the centre, while the periphery is characterised by economic malfunctioning, unemployment, and shortages of public space and transport. The more fringes there are, the more 'no man's land' they produce", says Dominique Alba (see interview, page 10-11). The reduction of social and urban wastelands is one of the positive effects of the Metropolis project.

MULTIDIMENSIONAL VISION

The Atelier International du Grand Paris (AIGP), founded in 2008, is a public interest group that leads research, development, communication and networking activities, and is one of the key players facing the immense challenge of rethinking the 814 square kilometre territory of the Greater Paris region with its population of seven million people. At its core is a think tank of fourteen interdisciplinary teams led by architects and urban planners. Entitled '12 Key Points,' their recent memorandum calls for a multidimensional vision as an essential ingredient of success. The major contrast between Paris and its suburbs can only be overcome through 'changing the perspective so that housing, activities, mobility and culture are dealt with jointly,' in a multi-centric Metropolis. Flagship projects should not take all the attention away from the countless small projects underlying discreet yet significant transformations.

Promoting collaboration and complementarity, the AIGP speaks about a 'permanent project' approach, in which citizens, officials and other actors together explore and define the lines of development for their territories. By the same token, the City of Paris launched a competition - 'Reinventing.Paris' - aimed at bringing together investors, architects, project owners, prime contractors, users, researchers, designers, and start-ups to turn a project into reality.

The city called for innovative solutions for 23 sites ranging from a plot squeezed between a motorway and a railway line to a former public shower building. The blog of Paris Property Group commented on the unexpected partnerships the competition brought about: 'Architects and developers united with NGOs, rooftop farmers, librarians, nightclub managers, and residents'. Starchitects and young practices featured among the finalists selected. The winners were announced in January 2016, a historic month for the new Metropolis. ■

THE HIDDEN TREASURES OF
DOMINIQUE ALBA

1. I find it extraordinary how people sometimes reclaim alternative spaces, for instance in the case of the summer event organized for the second time by **Ground Control**. They lounge on railway tracks and set up lovely bars in an abandoned railway depot.
2. The view from the summit of the **Parc de Belleville**, from which you can see the towers of La Défense on the opposite side of Paris.
3. Le **6b**, a cultural space near Saint-Denis RER and metro stations; an office building given a new purpose by a group of architects and housing 161 start-ups, artists, architects, musicians, craftspeople and social workers. Incidentally, they have also transformed the surrounding new development zone.
4. The **Berges de Seine** on the left bank became a top destination. The bar is packed, and it feels like July on the Mediterranean coast. Alternatively you can opt for somewhere a little quieter a little further off, and enjoy a picnic with friends.


2


4





BLACK FOREST BUILDING 11
Architect: **Juyuan Architectural Design Co., Shanghai**
Main contractor: **Huadi Construction Engineering Co. Ltd, Shanghai**
Local contractor: **Dongjiang Building Decoration Engineering Company Limited, Shanghai**
Project management: **Xudong Jiang, Shanghai**
Construction management: **Tiejun Wei, Shanghai**
Project development: **Jianjun Pan, Shanghai**
Fabricator/investor: **Shanghai China Eagle Home Co., Shanghai**
Reynaers systems: **Hi-Finity (HFP 179)**
Expected completion date: **Fourth quarter of 2016**

BRANCHING ARCHITECTURE

SHANGHAI (CN) - The appropriate name Black Forest refers to the extensive green park in the Putuo district of Shanghai that encircles the complex of the same name. Black Forest comprises three modern residential towers, each measuring one hundred metres tall, and is the third and final phase of a large-scale luxurious residential development project. The way in which branches grow on trees is reflected in the architecture of the towers: the storeys look like they have been randomly stacked one above the other, like the branches of a tree. Each stacked volume features 'leaves' in the form of green patios. Reynaers supplied the profiles for the façades of tower 11. This building contains luxury apartments, each with between 200 and 500 square metres of floor space. The Hi-Finity system with triple glazing, half of which are motorised, was used for the sliding windows leading to the patios. The refined lines of Hi-Finity contribute to the unobstructed enjoyment of the phenomenal view from the penthouse. Furthermore, the system is ideally suited to extreme weather conditions.

FRESH NEW FACULTY

BRUGES (BE) - KULAB, home to the faculty of Industrial Sciences and Biosciences in Bruges, is the result of a new collaboration between the Catholic University College of Bruges-Ostend (Katholieke Hogeschool Brugge-Oostende) and the University of Leuven (KU Leuven). KULAB is a modern, eye-catching building at the campus entrance. The fresh-looking whitewashed concrete building is the first of a series of buildings yet to be constructed, like a chain linking up the different parts of the campus. Two dissimilarly-formed elongated volumes comprise of three evenly-formed storeys with facilities for practicals and three broader, evenly-formed layers above those, housing classrooms. One striking detail is the fact that the uppermost column has been elevated, and a 'public layer' has been inserted in between. This transparent section of the building houses the most public facilities, such as the café and the auditorium. Another important detail is the variation in the breadths of the areas in between, creating spaces that serve as informal meeting places.





KULAB
Architect: **Abscis Architecten, Ghent**
Main contractor: **Artes Depret, Zeebrugge**
Fabricator: **Pouleyn, Vichte**
Reynaers systems: **CS 77, CW 50**
Expected completion date: **Third quarter of 2016**



GLISTENING JEWELS

DUBAI (UAE) - Swarovski Sparkle Towers is the first building in the Emirates to dazzle and glisten with an illuminated façade inspired by Swarovski crystals. The Austrian crystal company and the Dubai-based developer Tebyan created two luxurious residential 'jewels' - one with 14 storeys and one with 29 - for which Reynaers supplied all the profiles. The towers with apartments and penthouses are connected with each other by a four-storey block comprising a swimming pool, spa, jacuzzi, gym facilities, and a garden. The glistening towers offer panoramic views of the Dubai Marina and the beaches of Jumeirah. The luxurious look continues inside: crystal chandeliers hang in every public space and provide an additional shine.

SWAROVSKI SPARKLE TOWERS
Architect: **Mimar Emirates Engineering Consultants, KEO International Consultants, Dubai**
Lighting architect: **Lighting Design Partnership International (LDPi)**
Main contractor: **Sun Engineering & Contracting, Dubai**
Project developer: **Tebyan Development, Dubai**
Fabricator: **Ali Moosa & Sons Aluminium Industries, Sharjah**
Reynaers systems: **CW 50-SC, ES 50**
Expected completion date: **Fourth quarter of 2016**



POINTED TALL TOWER

PRATTELN (CH) - Ceres Tower attracts attention thanks to the unique slightly inwardly-curved façade, forming four sharp points at the top. A car park is planned for the first three floors, with offices on the next seven floors and 166 homes on the tenth to twenty-second floors. The building will be more than eighty metres high, making it the tallest building in Basel and its surroundings.

CERES TOWER
Architect: **Atelier WW Architekten SIA AG, Zürich**
Main contractor/Project developer: **HRS Real Estate AG, Frauenfeld**
Fabricator: **Rytz Industriebau AG, Zunzgen**
Investor: **CS REF LiningPlus (Credit Suisse), Zürich**
Reynaers systems: **CS 86-HI windows**
Expected completion date: **2017**

ROUNDED ROOF

LUANDA (AO) - The hotel with glazed façade covers an area of 60,064 square meters and has 31 floors. In addition to light and luxurious rooms, the hotel offers many wonderful facilities such as a large indoor swimming pool. Tykhe Hotel is particularly striking due to its arch-shaped roof. The roof houses a semi-enclosed 'sky bar,' where guests can enjoy a drink in the evenings, below the starry sky.

TYKHE HOTEL
Architect: **Vitor Hugo, Coordenação e Gestão de Projectos, SA.**
Supervision: **VHM Angola - Projectos e Avaliações VH, Lda**
Investor/Owner: **AAA Activos LDA**
Main Contractor: **Edifer Angola, Luanda**
Fabricator: **Edimetal Angola**
Reynaers systems: **bespoke solution based on CW 65-EF, CW 50 THV, CW 50, CW 50-SC, CS 77**
Expected completion date: **2016**



PROJECT

MACDONALD WAREHOUSE



CATALYST FOR CHANGE

PARIS, FRANCE – Architect: **OMA** Fabricator: **Alu Concept**



The 617-meter long Macdonald Warehouse could have blocked the renewal of the area on the edge of Paris. Instead, it became a catalyst of a vibrant, contemporary neighbourhood in the making.

Text **Anna Yudina** Photography **Eric Sempé – SPIKSTUDIO**

One of Europe's most densely built cities, Paris still needs thousands of new homes. As a result, attention turns to previously neglected land, notably the areas cut off from the rest of the city by industrial facilities and infrastructural networks. In 2001, the Council of Paris included a number of such enclaves in its Grand Urban Renewal Project.

The 200-hectare Paris Nord-Est sector was a mix of transport arteries, logistics and industrial premises with social housing and a few public facilities. The Macdonald Warehouse, Paris's longest logistics building designed by Marcel Forest in 1970, was among the 'urban barriers' that caused the area's isolation. The moment it was put up for sale in 2006, the city teamed up with the Caisse des Dépôts, its historic partner for investments in public interest projects, to repurpose the warehouse into a micro-urban complex with 1126 homes, as well as offices, schools, and retail stores gathered on 210,000 square metres.

"The scheme has a direct influence on the entire area; it enables everything that is happening in the neighbourhood", says Camille Picard, the Managing Director of ParisNordEST at the Caisse des Dépôts, the company in charge of the project. "Without it, the construction of a new development zone across the street wouldn't have started as they would struggle to sell flats and offices looking out on a warehouse."

DYNAMIC PLACE

When fully operational, the 'Macdo' will account for most of the programs necessary to transform Paris Nord-Est into a dynamic and desirable place. It has already sped up the construction of a new rapid transit station, and enabled the extension of the tramway line, which now cuts straight through the building.

The masterplan by renowned architectural firm OMA (Office for Metropolitan Architecture) and FAA (Floris Alkemade Architect) retained the extraordinary length of the original volume and complemented it with a



↖

A micro-urban complex with 1126 homes, offices, schools and retail stores

The extraordinary length of the original volume is complemented with a host of plug-over structures
→



host of plug-over structures to add contemporary scale and diversity. The client appreciated its remarkable flexibility: "We presented eight solutions to show that different options were possible within the same program", explains Alkemade, who, together with architect Xaveer De Geyter from XDGA, deals with the overall project coordination. "After winning the competition, we kept the basic principle, but started from scratch and developed a scheme that integrated all of the client's needs and all the regulations."

Challenged to coordinate fifteen architectural firms responsible for specific plots, the team devised a set of rules to ensure a balance of unity and creative freedom. Moreover, with the residential part divided 50-50 between social and private housing, it was crucial to establish aesthetic standards to ensure no visible distinction between public and private.



"THE SCHEME HAS A DIRECT INFLUENCE ON THE ENTIRE AREA, IT ENABLES EVERYTHING THAT IS HAPPENING IN THE NEIGBOURHOOD"

XDGA + FAA



Milena Wysoczynska is German and was born in 1976 in Poland. She is a graduate of the Braunschweig University of Technology in Germany, with one year abroad at the Architectural School Paris-Villemin in France, Milena worked at several European architectural firms, including OMA. Since 2008, she takes charge of the Parisian branch of Floris Alkemade Architect + Xaveer de Geyter Architects. As the Project Manager of the Macdonald Warehouse, to be delivered in 2016, she supervises the urban project and coordinates the work of 15 participating architectural teams on their 23 projects. "Life is too short to waste it on bad projects", is her motto.'

www.xdga.be

FAA - FLORIS ALKEMADE ARCHITECT



Floris Alkemade was born in 1961 in the Netherlands and graduated from Delft University of Technology. He worked eighteen years at OMA were he was one of the directors/partners since 2001. In 2008, Alkemade started his own practice. Currently FAA is working on the reconversion of the Macdonald Warehouse, and also on a housing project in the Parisian suburb of Boulogne Billancourt with Béal-Blanckaert and for the new development zone around Les Ardoines, one of the future stations of the Grand Paris Express. As of September 2015, he combines work at FAA with the function of the Chief Government Architect for the Netherlands (Rijksbouwmeester). He quotes Plato's 'everything is becoming, nothing is' as his motto.





←

FAA + XDGA architects designed the N5 and S6 buildings, including the bridge building over the tram tracks

CAISSE DES DÉPÔTS



Camille Picard was born in France in 1978. Picard studied urban economics at the ESSEC business school (France) and Bocconi University (Italy). She has a Master's degree in political science from the Sorbonne, and a Master's in urban planning from Sciences Po. Since 2012, Picard is the Managing Director at the SAS ParisNordEST created by the Caisse des Dépôts, for which she also is the Complex Project Manager. The investor largely contributes to the territory development as it manages popular savings and uses these to finance public interest projects (social housing; transportation, etc). Her credo is "Set the bar high from the start, and never lower it beneath that level."

caissedesdepots.fr

"WE DEVELOPED A SINGLE PATTERN FOR BOTH BLOCKS, WITH THREE-DIMENSIONAL PANELLING THAT REFLECTED THE SKY AND ADDED DEPTH TO THE FAÇADE"

SIMPLE YET STRONG SOLUTION

FAA and XDGA designed the pleated façade for the entire ground floor; the 'bridge building' over the tram tracks, the exterior spaces and two blocks of assisted rental housing at the corners of the internal square. "Seeking a simple yet strong solution, we developed a single pattern for both blocks, with three-dimensional panelling that reflected the sky and added depth to the façade," comments architect Milena Wysoczynska, project manager at Paris-based XDGA-FAA.

Performance, costs and technical evaluation were the key factors in specifying a number of products by Reynaers. The CF 77 system, whose folding elements with hidden gaskets create a particularly clean appearance, proved most efficient and aesthetically correct for ceiling-high, foldable doors that allow merging living spaces with loggias. On the other hand, the sober design of generous XS 68 windows integrates perfectly with the rhythmically extruded façades. ■

MACDONALD WAREHOUSE
Lead architect: **OMA, Paris**
Local architects and project coordinators: **XDGA + FAA (lots N5 and S6), Brussels**
Contractor: **Sicra, Chevilly-Larue**
Investor: **Caisse des Dépôts, Paris**
Fabricator: **Alu Concept, Chilly Mazarin**
Reynaers systems: **CF 77, XS 68**

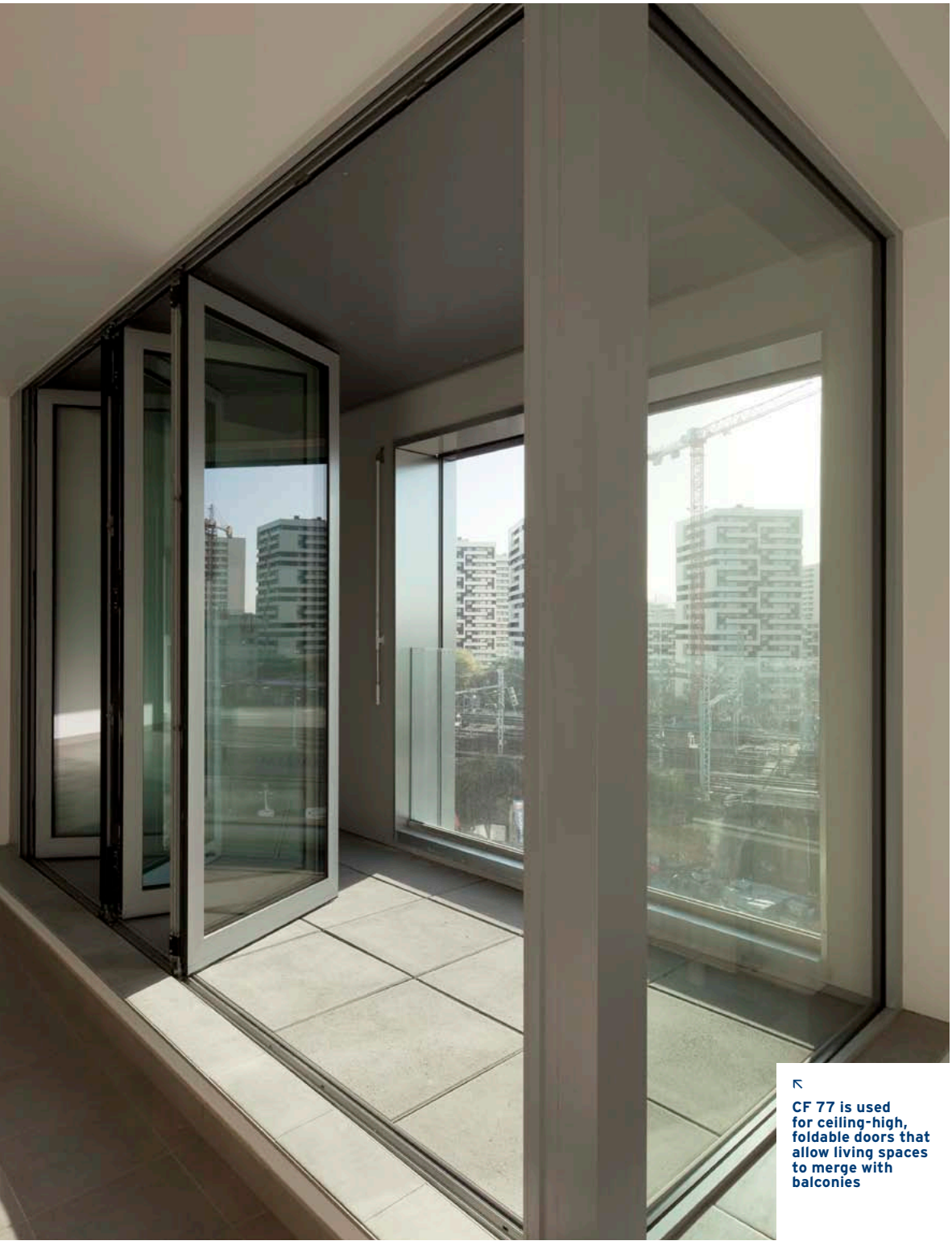

↖

CF 77 is used for ceiling-high, foldable doors that allow living spaces to merge with balconies

PROJECT

DOMINION TOWER



MOSCOW, RUSSIA – Architect: **Zaha Hadid Architects** Fabricator: **MBK Stroy**



THE SPACE OF FLYING

Dominion Tower in Moscow is a unique type of office building in the portfolio of Zaha Hadid Architects. The architectural firm founded and directed by the renowned Iraqi-British female architect has gained international acclaim for its designs for futuristic public facilities: museums and cultural centres, stadiums, educational institutions, and even bridges. Office buildings are included in the list too, mostly very large structures, whether skyscrapers or colossal clusters occupying vast areas. Dominion Tower is just so different from all the rest.

Text **Bart Goldhoorn** Photography **©Hufton+Crow**

The client, the Russian developer 'Peresvet Group,' commissioned Zaha Hadid Architects (ZHA) to design an unusual building that would remain modern for another fifty years. Initially, the architects came up with a design featuring very long hovering cantilevers with clear suprematist aesthetics. Although the client liked it, the bold design had to be scaled down at a later stage to fit the size of the site (62 x 50,5 metres). Conceived as long ago as 2004, and completed only this year, the seven-storey building is relatively compact. It also fits in well within the neighbourhood in the south-eastern part of Moscow, dominated by humble industrial buildings and generic housing from the Soviet era.

Its façades are covered with composite aluminium panels that seem to change colour slightly depending on the natural light. Although certainly impressive from some angles, Dominion Tower's exterior design could justifiably be labelled 'Modest Zaha.' However, the building is sure to be pleasing to the eyes and hearts of Muscovites, who suffered a great deal at the hands of out-of-proportion development in recent decades.

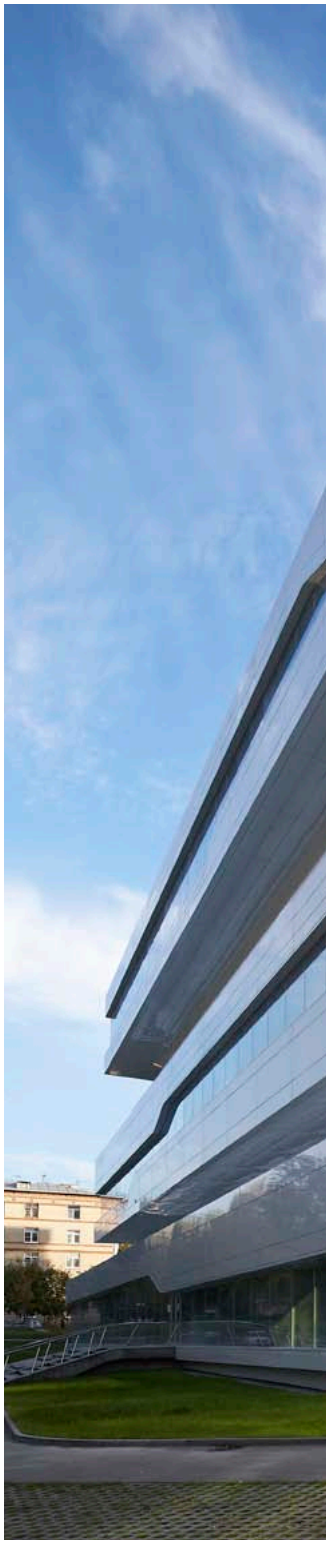

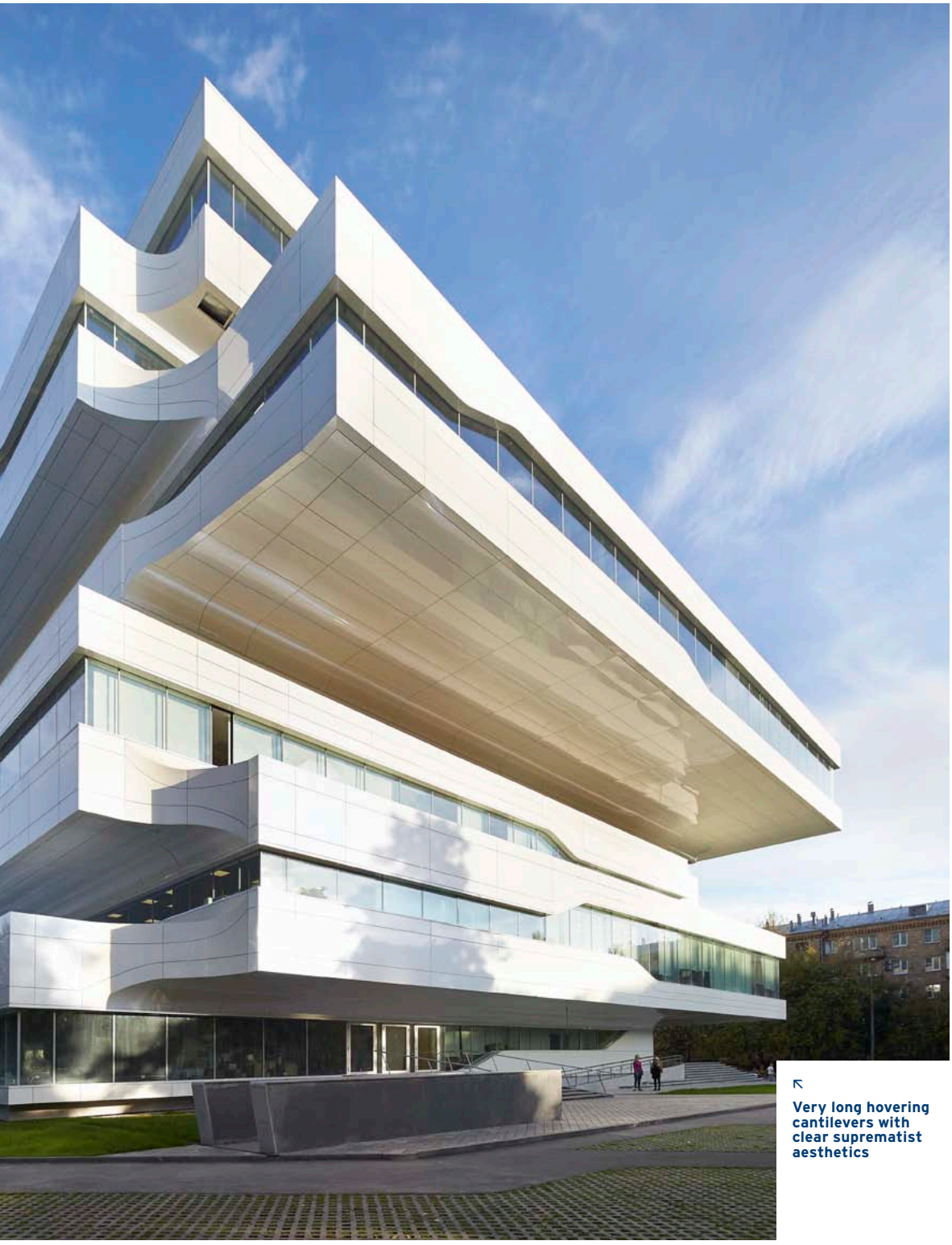

↖

Very long hovering cantilevers with clear suprematist aesthetics



↖

The breathtaking atrium with its skylights in CW 50-FRV

"WE LOVE THE IDEA OF OFFSETTING THE FLOORS AND SPACES TO GIVE A SENSE OF FLYING"

A SENSE OF FLYING

The full experience of Hadid's exuberant architecture is reserved for those who can get inside Dominion Tower and see the breathtaking atrium with its skylights: "We love the idea of offsetting the floors and spaces to give a sense of flying. Inside this atrium, there are always things below, above, and around you, while outside there are elements floating above your head. I call this three-dimensional space 'the space of flying'", said Patrik Schumacher, partner at Zaha Hadid Architects, on the day of Dominion Tower's official opening. The atrium is certainly dizzying, with its offset balconies, curved black-and-white staircases, and dynamic supergraphics applied to the walls and flooring on the ground floor. It's a very artistic place, and has proved to be an ideal environment for contemporary dance performances. One such performance took place on the opening day.

Another strong sensation that strikes visitors inside the building is the openness and visual permeability of the space. Workspaces are separated from the shared space of the atrium by means of transparent glass partitions, making it possible to see through the building virtually from window to window. The architects considered such openness beneficial to communication within the modern, dynamic businesses that will use this building.

ZAHA HADID STUDIO



Patrik Schumacher was born in Bonn in 1961. He studied architecture at the University of Stuttgart, where he received his degree Dipl Ing in 1990, and later at the Southbank University in London. He also studied philosophy at universities in Bonn and London. Schumacher joined Zaha Hadid studio in 1988. Today he is company director and senior designer, involved alongside Zaha Hadid herself in all projects the practice undertakes. He maintains an active role in the development throughout the design phases. His projects include the MAXXI Centre of Contemporary Art and Architecture (Rome), which won the Stirling Prize in 2010, and one of the practices first completed constructions, the Vitra Fire Station (1992).

www.zaha-hadid.com



→

Its façades are covered with composite aluminium panels that seem to change colour depending on the natural light



MBK-STROY LLC



Anton Masak was born in 1981 in Moscow. He studied law at the Russian Foreign Trade Academy. He worked at AGC Glass as a project leader and specialist of Special Projects Group and Key Clients in Southern Federal District of Russia. In 2010 Masak became co-owner of MBK-Stroy LLC and since 2011 he's active as commercial director of the company. With expertise in a wide range of services, including sophisticated structural engineering, Masak is the ultimate full-service partner to architects. "There are no unsolvable challenges!", he says.

"I CALL THIS THREE-DIMENSIONAL SPACE 'THE SPACE OF FLYING'"

ABUNDANCE OF GLASS

Glass is abundant in this building; not only on the inside, but also on the outside. The designers of the project opted for three-metre tall ribbon windows without imposts to create a sense of seamless continuity in the glazed façades. The subcontractor for the joinery, MBK Stroy, chose four aluminium systems by Reynaers: CW 50-SC, CW 50-FRV (roof), CS 77-HI, and CF 77-SL. According to Anton Masak, commercial director at MBK Stroy, "Reynaers is providing high quality and is offering the services of a professional team working in our country. The company was also able to satisfy the tight deadlines for completion."

The harsh Russian climate and strict construction rules forced designers to use thick triple-glazed windows that were produced by AGC Glass. To avoid the undesirable green hue of the glazing, the first glass layer needed to be clarified. This is just a small example of the great efforts made to bring ZHA's high-tech design to life, uniting dozens of subcontractors and specialists over a period of nearly ten years of design and construction. One can't but wonder at the fact that this job was completed without BIM. This is so to speak 'high-tech Russian style'. ■

DOMINION TOWER
Architect: **Zaha Hadid Architects, London**
Main contractor: **Stroy Group, Moscow**
Fabricator: **MBK Stroy, Rostov-on-Don**
Façade consultant: **Ove ARUP, London**
Investor: **Peresvet Group, Moscow**
Reynaers systems: **CS 77-HI, CF 77-SL, CW 50-SC, CW 50-FRV (roof)**



↖

Windows enfold the entire building on every floor and provide an abundance of daylight hence keeping a sleek appearance

PROJECT

CRYSTAL

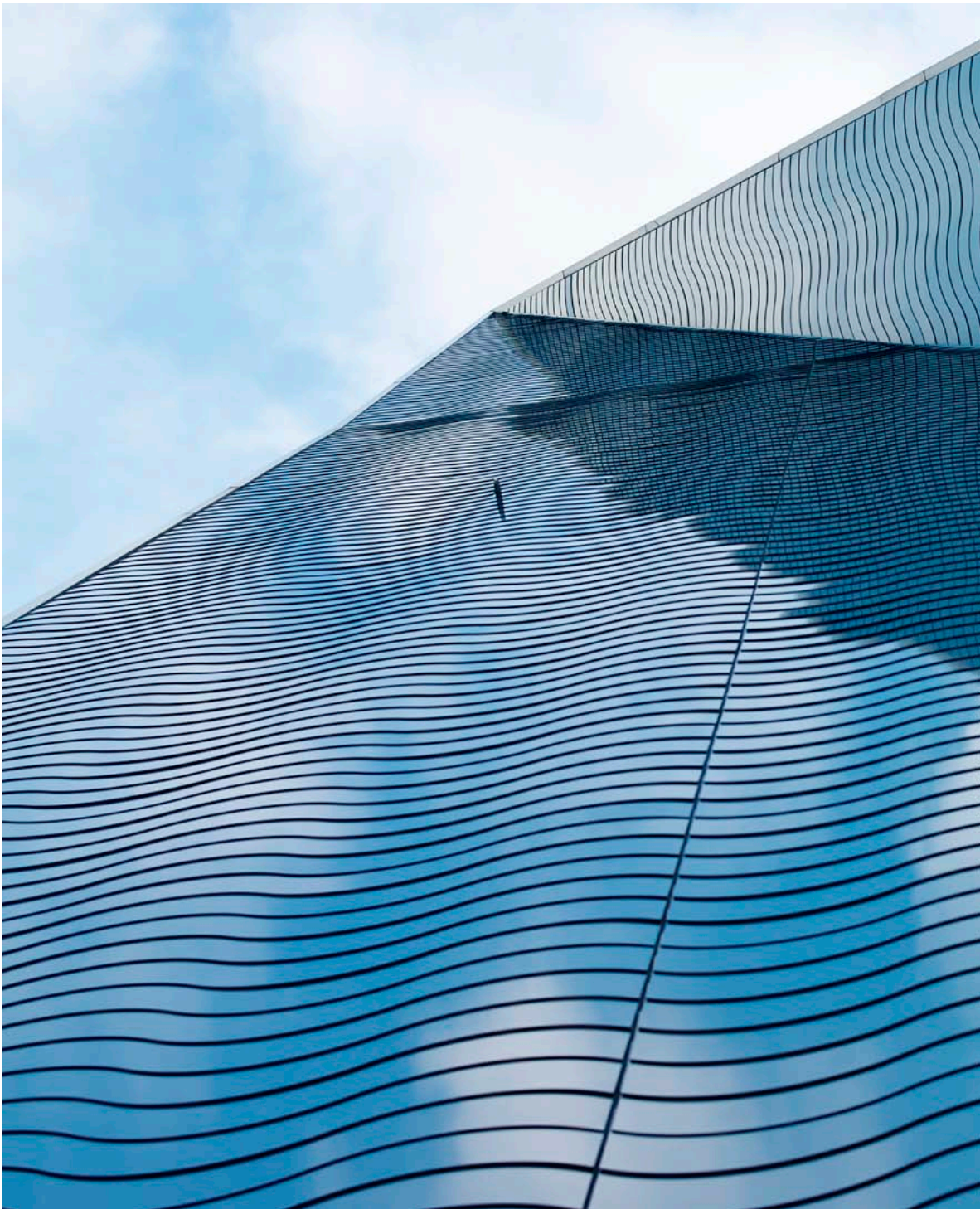

PRAGUE, CZECH REPUBLIC – Architect: **Atelier 15** Fabricator: **Nevšímal**



CHESSBOARD-LIKE CRYSTAL

Crystal office is the latest addition to Prague's Vinohrady district. The striking building adds a new dominant feature to this architecturally-rich residential and business area.

Text **Adam Štěch** Photography **Vojta Zikmunda (Nevšímal), Marek Hrubý**

The new Crystal office building, beside the busy Vinohradská boulevard, was constructed and completed in the summer of 2015. The new administrative complex is situated opposite one of Prague's largest cemeteries, Olšany, and the bizarre-looking post-modern 1990s Don Giovanni hotel. On the same side of the street is the modernist 1960s Casablanca tower and a long block of Czech savings bank offices, all designed by Atelier 15 architects.

Commissioned by the GES REAL development group, the structure of the houses with a total of 12,827 square meters, comprising offices available for rent and five retail units on the ground floor, including a café and a brasserie. Warehouses, technical facilities, and 121 parking spaces are concealed underground.

ATTRACTIVE HIGH-RISE BUILDING

The Crystal building's height exceeds the height of surrounding structures, creating a high-rise counterpart to the nearby Casablanca office tower that subtly and sensitively fits in with the existing urban environment. "Its significant height and shape means that this building has a unique and unexpected look, from every angle", says Libor Hrdoušek of Atelier 15, who together with Radek Lampa, designed this geometrically rigorous yet organic structure.

The Crystal building has two main parts. On the Vinohradská side, it rises a total of fourteen storeys. The façade of the second part stands alongside the much quieter Kouřimská street on the opposite side of the site. The building has fewer storeys on this side, in keeping with the roof line of the other buildings in the street. Together, the larger and smaller volumes create a compact architectural landscape

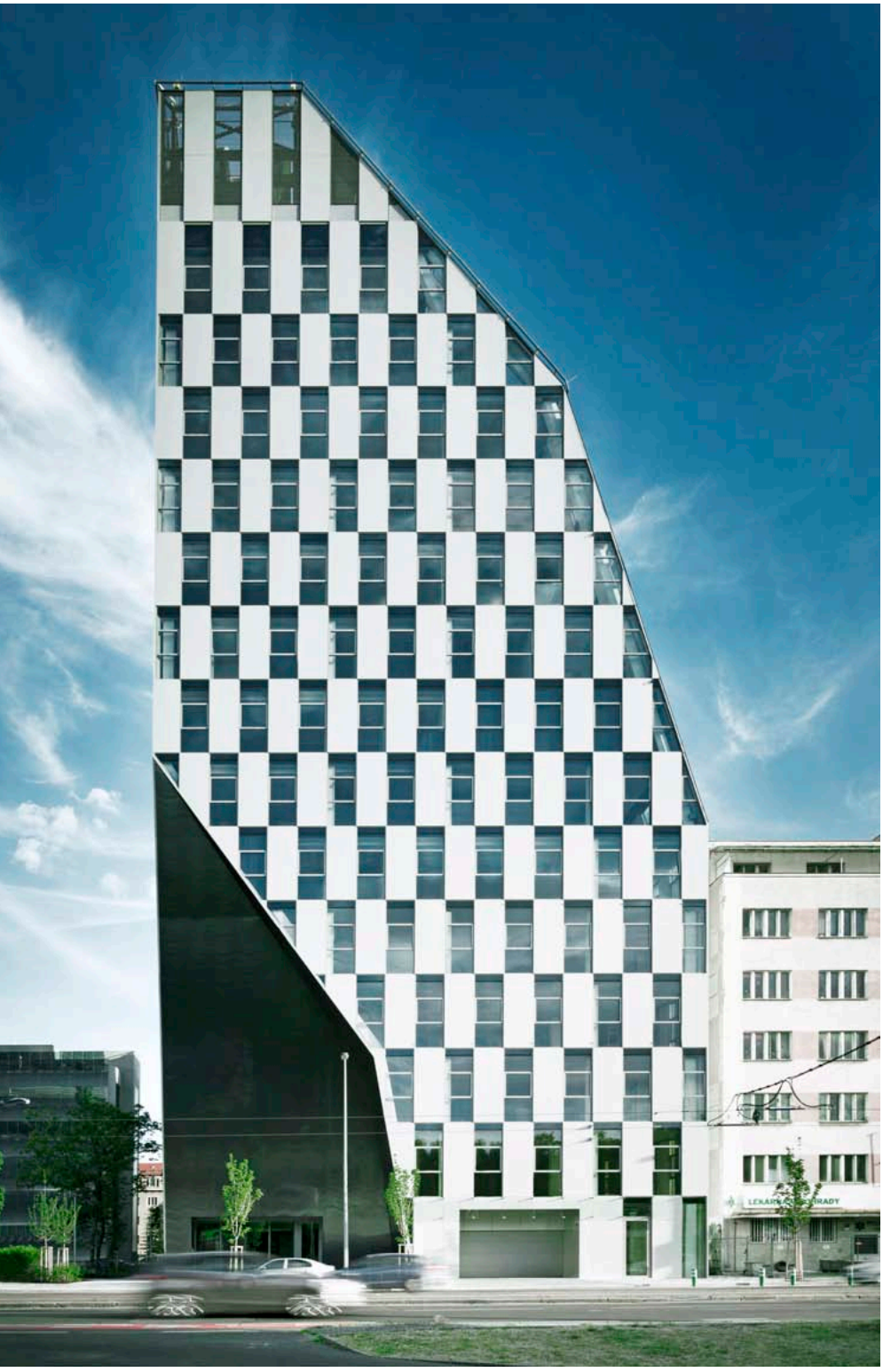

←
The volume has been covered with a chessboard-like glazed surface



unit, sliced by a striking sharp chasm, which inspired its name.

CHESSBOARD APPEARANCE

The volume has been covered with a chessboard-like glazed surface. "The façade was designed to conjure up the concept of a crystal. This chess-like visual structure is also used on the roof parts to visually unify all exposed sides of the building. Walking around the outside of the building, the reflected and refracted light give an impression of dynamism. Clarity and light underpin the strength of the composition", says the architect.

Petr Nevšímal, general manager of façade fabricator Nevšímal adds: "To produce a complete skin for the entire Crystal building, we used a modular façade, which proved to be the only truly ideal solution for this project.

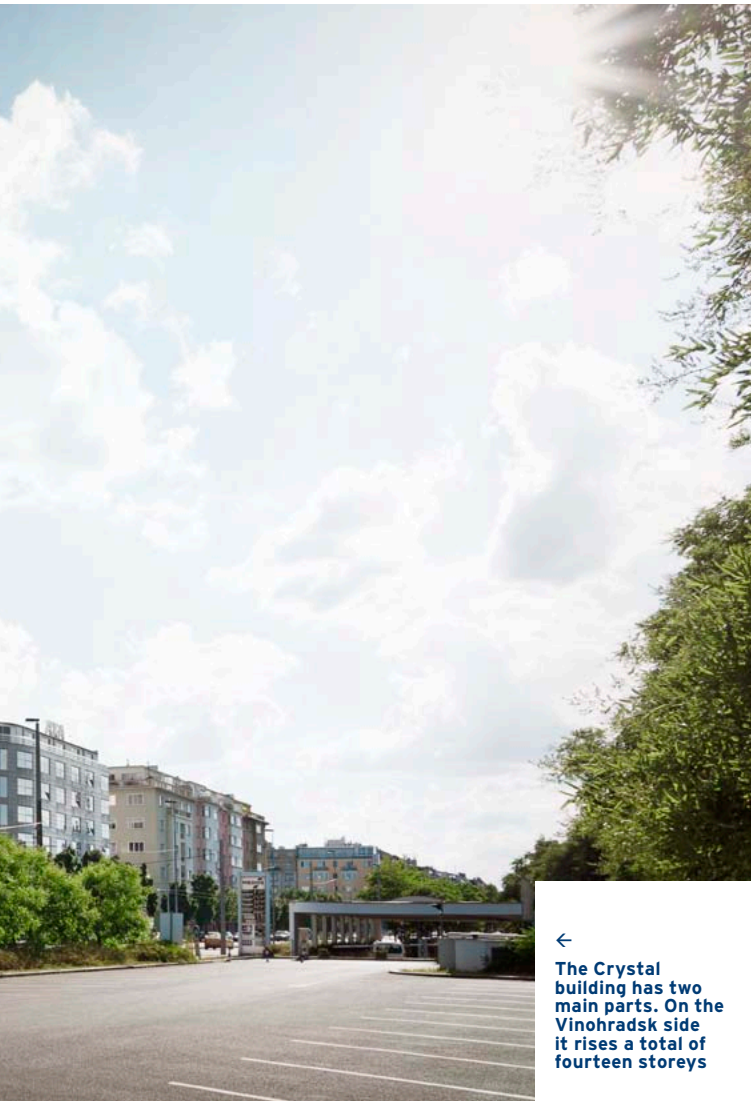

← **The Crystal building has two main parts. On the Vinohradsk side it rises a total of fourteen storeys**

"WALKING AROUND THE OUTSIDE OF THE BUILDING, THE REFLECTED AND REFRACTED LIGHT GIVE AN IMPRESSION OF DYNAMISM"

ATELIER 15





Libor Hrdoušek and **Radek Lampa** are both graduates of the Czech Technical University in Prague. They founded the architectural studio Atelier 15 in 1997. Since then, they have focused on the design and construction of various architectural projects including office buildings, hospitality and sports facilities, urban developments, and residential buildings, including individual houses. Hrdoušek is also a member of the Czech chamber of chartered engineers and technicians. Radek Lampa is the head of the architecture studio at the Czech Technical University in Prague.

www.atelier15.cz

NEVŠÍMAL



Petr Nevšímal was born in Nymburk in 1980. He is a graduate of the Faculty of Civil Engineering at the Czech Technical University in Prague. He is the director of Nevšímal, a family-owned company that has dealt in exterior façade cladding since 1993. Since its foundation, the company has grown to become one of the most prolific construction and manufacturing firms in the Czech Republic. Outside the Czech Republic, the company is also active in developing expertise in fire-resistant construction. In recent years, Nevšímal has worked on a number of important projects including the KCEV environmental centre in Vrchlabí by Petr Hájek Architects, and experimental residential projects such as Villa Hermína by HŠH Architects. "Every problem has a solution, and nothing is as difficult as it first seems". is his motto.

www.nevsimal.cz

"THE VOLUME HAS BEEN COVERED WITH A CHESSBOARD-LIKE GLAZED SURFACE"

This type of façade also facilitated other aspects of the project: the shape of the object, the segmentation, maximising the use of the land, the construction time, the physical characteristics, and of course the architectural assignment."

The implementation was relatively complex, and some elements had to be custom made for the project. "The shape of the object did not allow the use of standard system profiles, so we had to add custom-made elements, including corners and channels. The shape of these profiles was prepared using 3D models of the objects. Together with Reynaers, we developed a solution that incorporated drainage modules, used for example on sloping surfaces. We appreciated the constructive collaboration with the company and its support", Nevšímal concludes. ■

CRYSTAL
Architect: **Atelier 15, Libor Hrdoušek and Radek Lampa, Prague**
Main contractor: **Metrostav, Prague**
Investor: **Prague Real Estate Invest, Prague**
Project developer: **GES REAL a.s., Prague**
Fabricator: **Nevšímal a.s., Prague**
Reynaers system: **bespoke solution based on CW 86-EF**

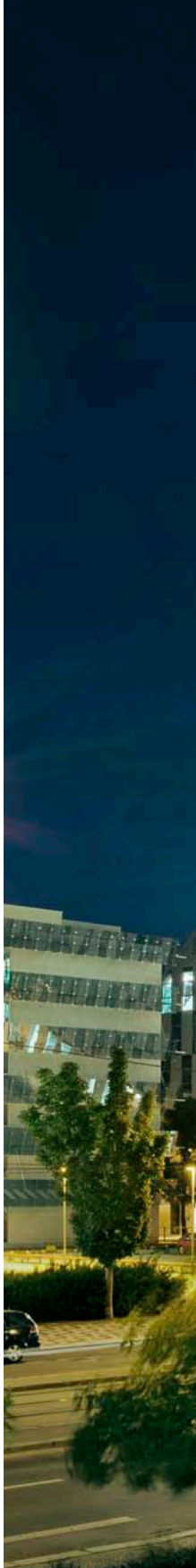



←
The façade was designed to conjure up the concept of a crystal

PROJECT SOLUTION

Systems:
Bespoke solution based on CW 86-EF/HI with integrated opening elements, CS 86-HI/HV windows, CS 86-HI doors, CW 50-HI FRV, CW 50-HI

Project description:
- Development of CW 86-EF/HI bespoke façade solution to match static requirements of the building (windloads)
- 6.300 m² of CW 86-HI element façade, of which 15% is inclined
- 3 new profiles and 4 new gaskets for vertical elements
- 3 new profiles and 2 new gaskets for inclined elements (17°)
- CW 86-EF/HI profile shape (inner part) was modified to enable more flexible anchoring position and better possibilities for profile corner connections
- Bespoke corner solutions
- Bespoke cascade drainage solutions for inclined elements by use of bespoke gaskets and special glazing beads
- Floating windows from system CS 86-HI/HV (vertical façade elements) and CW 50 Flush Roof Vent (inclined façade elements) placed within typical CW 86-EF/HI modules with use of CW 50 standard transoms

Elements:
- CW 86-EF/HI façade elements: 1350 x 3700 mm
- CS 86-HI/HV turn-tilt windows: 1308 x 1250 mm
- CS 86-HI high intensity entrance doors: 1190 x 2930 mm

Glazing:
- 30 mm double glazing
- 8/16/6

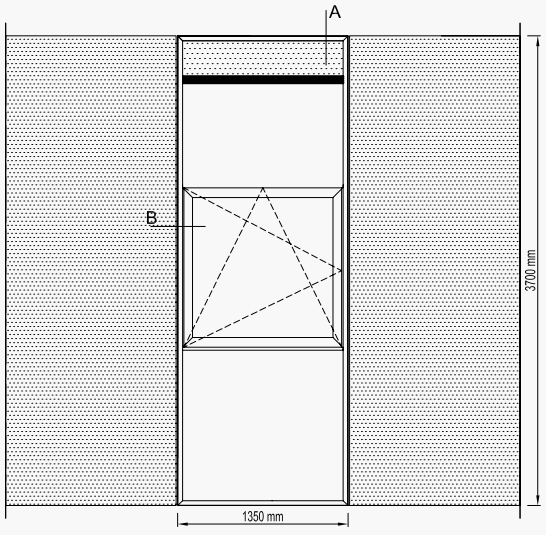

CW 86-EF/HI Typical element

1. CW 86-HI/EF bespoke frame profile
2. Linking gasket
3. Outer glazing gasket
4. Glazing bead
5. Window CS 86-HI/HV
6. Shadow box
7. Gasket for cascade drainage
8. Support profile
9. Glazing bead for bottom of inclined element
10. Glazing bead for top of inclined element
11. Insulation gasket

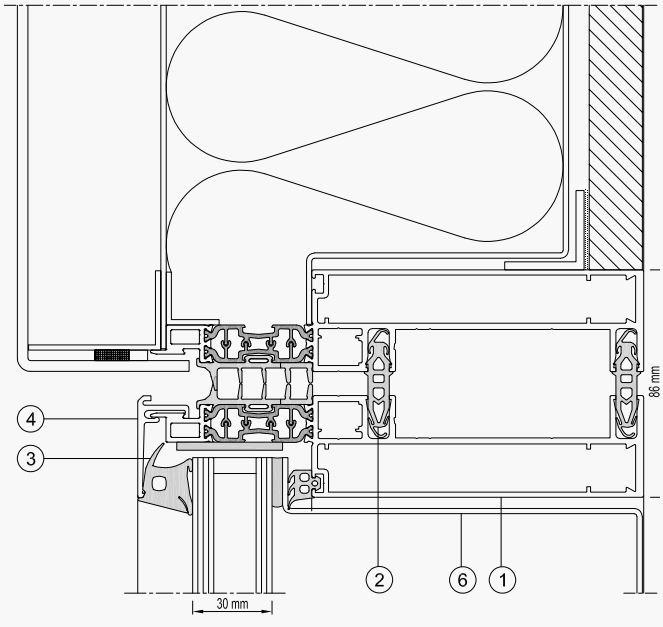

CW 86-EF/HI vertical section A

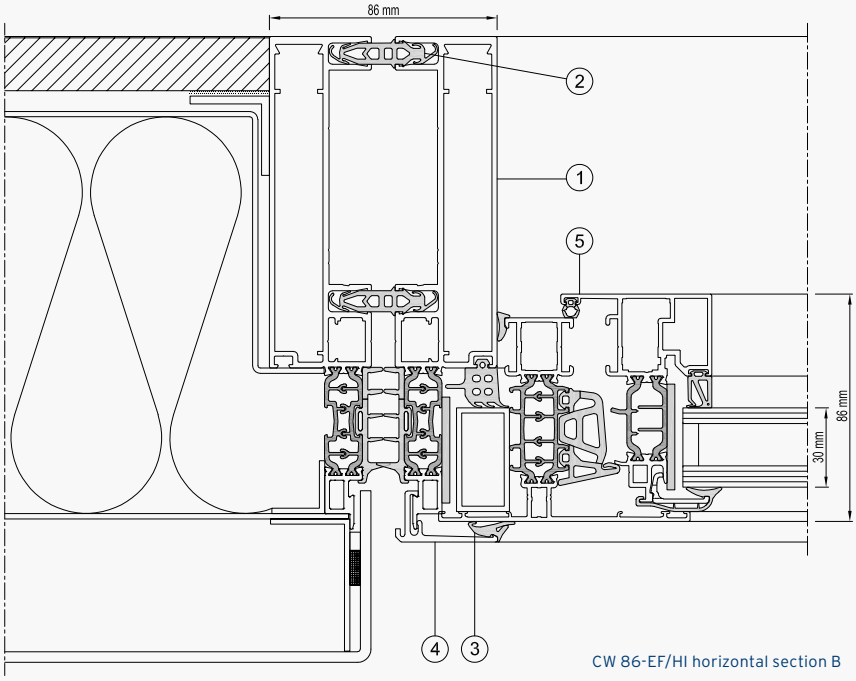

CW 86-EF/HI horizontal section B

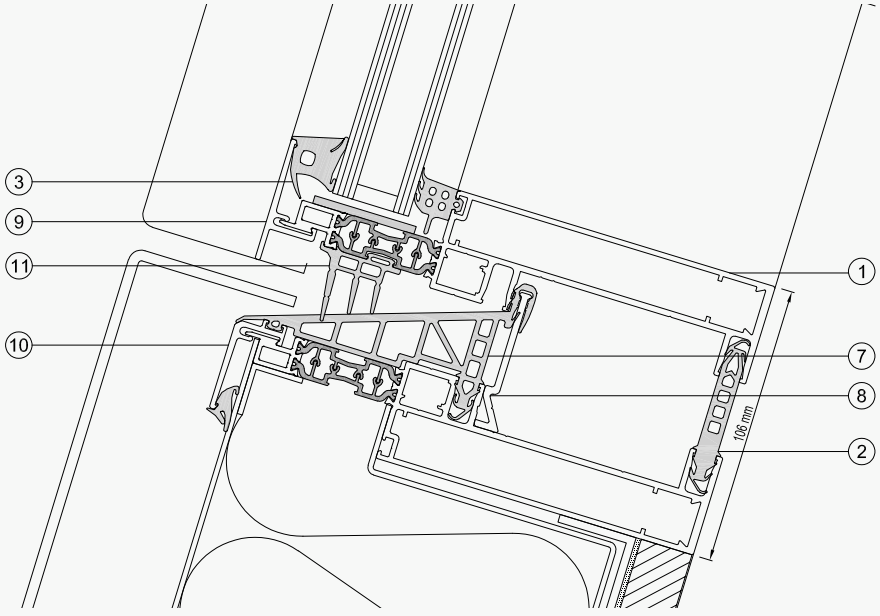

CW 86-EF/HI vertical section inclined element – drainage solution

PROJECT

JOIE DE VIVRE HOUSE



TRANSPARENT HOME

LAKE OSWEGO, PORTLAND, OREGON (USA) – Architect: **Barclay Home Design** Dealer: **Portland Millwork**





↑
the design takes its cues from Pacific Northwest accents, with natural materials



Every year, during the month of August, the very best of the region's house builders in Portland, USA, are selected to participate in a showcase of new unique homes to 80,000 visitors. This 'Street of Dreams' event is designed to display innovations in home design. In anticipation of participating as one of nine houses on show for 2015, designer Barclay Home Design, contractor Brian Schmidt Builder and dealer Portland Millwork joined up to deliver Joie de Vivre House, which received no less than 17 of the 21 awards available for the Street of Dreams exhibition.

Text **Isabelle Priest** Photography **Blackstone Edge Studios**

Completed in only six months, Joie de Vivre House (joy of living) near Lake Oswego is a testament to teamwork, long-term business partnership and collaboration. The contemporary home is a 533 square metres, four-bedroom, four-bathroom, three level detached dwelling overlooking Mount Hood home and was designed for a couple and their two high school children. "The family's wish list was quite basic in description, but their vision of the final home was very exciting", explains architect Mike Barclay of Barclay Home Design. "The description of their idea was contemporary, open, airy, lots of natural light, transparent and unique."

The design of the house is characterised by the expansive use of glazing, inside-outside living, and an open plan living space. Custom interior details include a unique suspended staircase, maple cabinetry and AV systems. Externally, the design takes its cues from Pacific Northwest accents, with natural materials of stone, fir and cedar.

"THE TEAM WAS EXCELLENT, AND INSTRUMENTAL IN OVERCOMING THE CHALLENGES"

An essential part of the project was the specification of the oversized windows and doors, including 17-feet (5.18 metres) tall corner windows. "The homeowner wanted large, bright spaces to accentuate the stunning views of the mountain and hillsides beyond", explains Brian Schmidt of Brian Schmidt Builder, who was tasked with assembling the team to build the home. Dave Carlson from the dealer Portland Millwork explains: "We directed Mike Barclay to Reynaers because it was the only company with a solution to the large corner windows. Any other product would have required the windows to be much smaller and divided up into smaller sizes."

Due to its complex design, a number of Reynaers systems were implemented, several of which have been introduced for the first time in the North West market. Alongside the CW 50 Curtain Wall system and CS 68 tilt turn windows and doors, the CP 130 lift-and-slide doors allow for wide-open access to the outdoor living spaces.

Combining so many systems complicated the already tight schedule. "We were provided a very short timeline", says Schmidt. "In a multi-million dollar home, attention to detail in every





↖ **The oversized windows and doors include 5.18 metres tall corner windows**

BARCLAY HOME DESIGN

Mike Barclay began his career in 1974 designing floor plans for houses with his business partner. In 1982, Barclay left the partnership and started a custom residential design business, Barclay Home Design. The majority of the projects have been in the northwest of the U.S.A. (Oregon, Washington, Idaho and California) with an occasional east coast location and a multi-lot custom undertaking in Japan.

BRIAN SCHMIDT BUILDER



Brian Schmidt has been working in the construction industry for nearly twenty years. Based in Oregon, he founded Brian Schmidt Builder in 2014 to serve high-end custom home new build and remodelling clients. With an MBA in marketing and management from Willamette University, Schmidt strives for a modern approach to house building, including impeccable customer service and communication. Over the years Schmidt has formed important and lasting business relationships throughout the industry, including with Portland Millwork.

brianschmidtbuilder.com



aspect was a must. The team, however, was excellent, and instrumental in overcoming the challenges. For example, we had to organize the construction schedule around a phased window delivery that would accommodate the assembly of the window frames and glass delivery."

"We installed the entire window package within three weeks. Given the large sizes and weights of the glass (800 lbs or 360 kilo each in some cases), we utilized cranes, vacuum suction attachments, and multiple crews."

Portland Millwork worked side by side with four local window installation companies to hurry the installation. Work was divided up by



↖ **The homeowner wanted bright spaces to accentuate the stunning views of the mountain and hillsides beyond**

product type so there was a high level of efficiency and skill for each part of the installation. Reynaers provided several of their employees as technical advisors who worked hands on to train and assist the local installers. "There was a great spirit of cooperation by the entire team to get the job finished on time", says Carlson. ■

JOIE DE VIVRE HOUSE
Architect: **Barclay Home Design, Clackamas (OR)**
Contractor: **Brian Schmidt Builder, Lake Oswego (OR)**
Dealer: **Portland Millwork, Wilsonville (OR)**
Reynaers Systems: **CS 68, CP 130-LS, CW 50**

PORTLAND MILLWORK



Dave Carlson is general manager and one of the five original founders of Portland Millwork. Five friends who had worked together in the window and door distribution business in Portland established the company in 1997. The company serves the residential and commercial markets in Oregon and South-West Washington. The firm has strong alliances with the finest window and door manufacturers to provide clients with the best solution for each project. Carlson has a Bachelor of Science in Mathematics from North Park University. "I always enjoy working on challenging projects", he says.

portlandmillwork.com



MASTERLINE 8: WINDOW TO THE FUTURE

Reynaers recently launched MasterLine 8, a new window system that combines countless design opportunities with first in class performance in terms of thermal insulation, air- and water-tightness, and production speed. This new and clever innovation is opening a new window to the future for Reynaers.

MasterLine 8 meets the demands of building professionals who value excellent performance, durability, comfort, productivity and sustainability. This new generation of innovative window solutions mirrors the current architectural trend towards maximising daylight while offering ultimate insulation levels.

FLEXIBILITY FOR MASTERS

The unique MasterLine 8 concept makes it possible to combine an extensive range of window opening types, design variants, and different levels of thermal insulation, offering ultimate flexibility to architects, investors and home owners.

The design variants, each with their own distinct look and feel, make MasterLine 8 suitable for any architectural style. The Functional style is characterised by straight lines to fit a stylistic design. The curved profiling of the Renaissance design is reminiscent of a more classic and traditional architectural look. The bevelled lines of the Deco design match the modern building style.

MASTERLINE 8
Window



↑ MasterLine 8 Deco Standard

PERFORMANCE FOR MASTERS

With this new and innovative window system, Reynaers is looking to the future and focusing on sustainability and ecological awareness. In order to save energy and increase comfort, Reynaers made every effort to excel on thermal insulation and air- and water tightness, all within one system, with a limited building-in depth of 87 mm.

Regarding the thermal performance, the MasterLine 8 features three different levels of insulation, offering solutions for high insulated, low energy and even passive houses. These different levels of insulation are achieved by the integration of new and clever materials. For the High Insulation+ variant, innovative insulation bars are incorporated, which use a low-emission foil and thus improve the insulation value by reflecting and retaining heat.

MasterLine 8 allows for a water tightness of 900Pa, reduced air loss at 600Pa air pressure, and excellent sealing properties. These ultimate performances are achieved by the overall concept and the increased overlap of the central gasket between outer frame and vent. Additionally, this increased overlap makes it easier to calibrate the window for water tightness and air tightness during the installation.

MasterLine 8 offers the following insulation options for a frame-vent combination with a sightline width of 119 mm:
- **Standard**: Uf value of 1.9 W/m²K
- **HI (high-insulating)**: Uf value of 1.5 W/m²K
- **HI+**: Uf value of 1.2 W/m²K (Uwindow down to 0.65 W/ m²K).



↑ MasterLine 8 Renaissance HI



↑ MasterLine 8 Functional HI+

balcony door →



MASTERLINE 8: BUILT UP USING A MINIMAL AMOUNT OF DIFFERENT COMPONENTS, ALL DESIGNED AND MADE TO MEASURE, RESULTING IN AN EXTREMELY EFFICIENT SOLUTION REGARDING MATERIAL USE AND PRODUCTION TIME

In addition to these performances, MasterLine 8 is perfectly suited to create large vents, using narrow yet strong profiles. As a result, the window system allows for plenty of daylight, thereby meeting the needs of architects. Moreover, MasterLine 8 offers new opening options for vents of different sizes, such as single and double balcony doors with minimal thresholds for both inward and outward opening elements.

Needless to say, architects can seamlessly integrate MasterLine 8 with other Reynaers systems, such as CP 130 and CP 155 sliding systems, the new glass balustrade, the Mosquito system, and curtain wall system CW 50.

Scan the QR code to watch the MasterLine 8 movie

EFFICIENCY FOR MASTERS

The concept of MasterLine 8 is based on a unique combination of new technology and clever design. This high-quality system is built up using a minimal amount of different components, all designed and made to measure, resulting in an extremely efficient solution regarding material use and production time. As such, MasterLine 8 uses identical gaskets for the acoustical and glazing sealing. The process of the corner and transom

The new window system allows plenty of daylight, meeting the current architectural trends
↓



Architects can download the BIM models for use in their designs. Scan the QR code or visit www.reynaers.com or www.BimObjects.com for more information.

connections has been further optimised, and the additional glue has been re-engineered to guarantee a perfect flow and curing of bonded components. This results in a high-quality solution, with a strongly improved production process.

Another important topic to increase efficiency is the availability of BIM models, with all relevant data for MasterLine 8, for the different parties involved in the building process. These models are available on the different existing platforms, and the next step is the BIM model configurator (Simple as BIM) to generate all possible configurations by the use of a dedicated and unique plug-in to connect with Reynaers' calculation and designing software ReynaPro.

MasterLine 8 Building connection type B

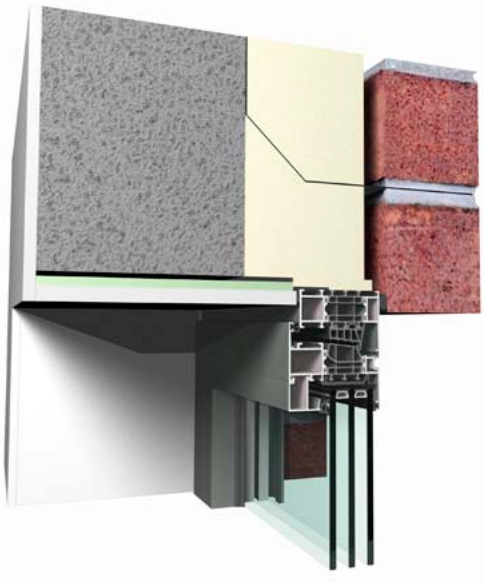

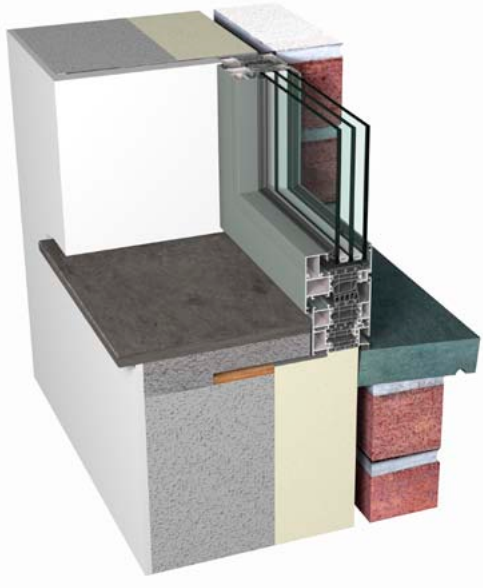

For more information about the building connections, please visit http://www.reynaers.com/bim-models

REYNAFLOW

In addition to the launch of MasterLine 8, Reynaers also brings Smart Manufacturing Solutions to the window and door industry, with the dedicated software package ReynaFlow.

This intelligent control system and workflow manager is designed to optimize, control and improve the production process. This is achieved by the complete integration and data exchange between ReynaFlow and the calculation and designing software ReynaPro.

This innovation takes Reynaers into Industry 4.0 implementation. It gives Reynaers fabricators the opportunity to monitor production, increase efficiency and reduce waste. In short, the production process of windows and doors is more efficient, more sustainable, easier and results in significant cost and time savings.



↑

The intelligent control system and workflow manager ReynaFlow is designed to optimize, control and improve the production process



WARSAW, POLAND

The office building of HB Reavis located in Warsaw's business district was designed by HRA Architects. The impressive 10-storey building, with a 11,000 m² glass façade offers 34,500 m² of leasable office space. Reynaers supplied a range of systems, including systems for the impressive glass façade with grey, black, and orange elements, maximising the amount of daylight that can enter the building. The building has been awarded the BREEAM quality mark 'Excellent'.

OFFICE BUILDING AT POSTĘPU 14
Architect: **HRA Architekci Sp. z o.o. Sp.k., Warsaw**
Main contractor/Investor: **HB Reavis Construction PL Sp. z o.o, Warsaw**
Fabricator: **Mega Aluminium Sp. z o.o., Wołomin**
Reynaers systems: **bespoke solution based on CW 50-HI, bespoke solution based on 50 THW, CS 86-HI doors and balcony doors, CS 77-AD**



TIM VAN DE VELDE

VEURNE, BELGIUM

The new headquarters of Enjoy Concrete is a showcase for the company's own products: this business premises is built entirely from precast concrete elements. The 'printed row of trees' along the entire length of the lower storey typifies the building, serving as a mirror to the row of trees along the Damme canal. As a contrast, a large glass column containing the meeting rooms has been positioned perpendicularly on top of the warehouse. Enjoy Concrete won the Precast in Buildings award 2014 from FEBE, the Belgian Precast Concrete Federation.

ENJOY CONCRETE
Architect: **Govaert & Vanhoutte Architects, Sint-Michiels, Bruges**
Main contractor: **Valcke Prefab Beton, Vlamertinge, Ieper**
Fabricator: **Allaert Aluminium, Harelbeke**
Reynaers systems: **CS 77, CW 50**



DANIEL NADELBACH PHOTOGRAPHY

NEW MEXICO, USA

This villa in Santa Fe was designed to bring the outside in. The sliding door in the living room is a remarkable feature. The vents slide into the wall, providing an optimum open view across the hills. Furthermore, additional comfort is provided by the flat threshold that seamlessly connects the room to the outside covered terrace.

BUNKOWSKI RESIDENCE
Architect: **Hoopes & Associates Architects, Santa Fe**
Main contractor: **Prull Custom Builders, Santa Fe**
Fabricator: **Reynaers Inc., Phoenix**
Window installer: **Williams Window & Door, Santa Fe**
Reynaers systems: **CS 68, CP 155-LS pocket solution**


MARCO CASAGRANDE

MILAN, ITALY

The China Corporate United Pavilion - measuring 360 square meters - built for the Expo 2015 in Milan appears to be covered in a layer of pizza dough. Beneath this roof is the green heart with an auditorium, a restaurant, and exhibition spaces. The spiral form - inspired by the form of DNA - that encircles this leads the visitors to a rooftop garden. The temporary construction comprises lightweight membrane-like material and a glass façade, for which Reynaers provided the CW 50-VL profiles.

CHINA CORPORATE UNITED PAVILION EXPO MILANO 2015
Architect: **Architectural Design and Research Institute of Tongji University Ltd (Group), Shanghai**
Project development: **Casagrande Srl, Gaiarine (TV)**
Fabricator: **Adriatica Serramenti, Villesse (GO)**
Reynaers system: **CW 50-VL**



LONDON, UNITED KINGDOM

During the renovation of the eco-friendly residential complex, 56 affordable homes for purchase (Kingston Heights) were completed, as well as 81 deluxe apartments (River Walk). The complex is characterized by spacious patios and large windows. The innovative way in which energy is generated for the production of hot water and the central heating system makes this project a pioneer in sustainability. The supply of water is ensured by the River Thames through a pump system. The project has won numerous sustainability awards.

KINGSTON HEIGHTS
Architect: **Paul Brookes Architects, London and KDS & Associates, London**
Main contractor/developer: **United House, London**
Project developer: **NHP Leisure Development, London**
Fabricator: **London Architectural Glazing, London**
Reynaers systems: **ES 50, CW 50, Vision 50**



ELD PARTNERSHIP

HASSELT, BELGIUM

Architecture and nature fuse together: two steeply sloping green roofs atop two façades made entirely from glass conceal start-ups focused on technology, high-tech, ICT, and new media. The Corda Campus is situated on the former Philips site and consists of 14,000 m² of office space, meeting rooms, a lounge café, a restaurant, and the reception. The flexible work spaces are located on the seventh floor, situated thirty meters above ground level. The roof of the energy-efficient building serves as thermal insulation and collects rainwater.

CORDA CAMPUS
Architect: **ELD Partnership, Antwerp**
Main contractor: **Democo nv, Hasselt**
Fabricator: **Preciz Al Energy LTD, Rousse (BG)**
Reynaers systems: **CW 50-SC, CS 77, CP 130**



ST PETERSBURG, RUSSIA

The architecture of the Royal Beach restaurant refers to a rocky cliff beside the sea. The rocky elements are covered with grass and have striking angular panoramic windows that reflect the surrounding natural environment.

RESTAURANT ROYAL BEACH
Architect: **Astragal Design, Dmitrii Fisak, Sergey Shusterman, St Petersburg**
Main contractor: **Zodchii Stroy, St Petersburg**
Investor: **Pharmacor, St Petersburg**
Fabricator: **Alumstroy, St Petersburg**
Reynaers systems: **CW 50-SC, CS 77-SC**



ROTTERDAM, THE NETHERLANDS

The rugged and robust multifunctional building is inspired by the historic architecture of the port. Musa has breathed new life into the once neglected district of Katendrecht: it comprises a secondary school, rented flats for senior citizens, a covered car park, and social and sports facilities.

MUSA KATENDRECHT
Architect: **diederendirrix architecten, Eindhoven**
Main contractor: **BAM Woningbouw, Bunnik**
Fabricator: **Alkondor, Hengelo**
Reynaers systems: **CW 50, CS 77-HV, CS 77-FP**

AALBORG, DENMARK

The heart of the campus is a large public atrium that can be used as an exhibition space, open-air cinema, cafeteria, and auditorium. It is designed to be an attractive meeting place for the 900 students, the staff, the researchers, and the inhabitants of Aalborg. The enormous glass façade that faces the city and the harbour contributes to the campus's contact with its surroundings.

CAMPUS UNIVERSITY AALBORG
Architect: **Henning Larsen Architects, Copenhagen**
Fabricator: **Fjelsø Entreprise A/S, Aalestrup**
Reynaers systems: **CW 50, CS 77 doors**



TIRUPATI, INDIA

The hotel is located in a popular place of pilgrimage. In reference to this, all public spaces gained their own symbols, colours, and geometry representing the ten reincarnations of the god Vishnu. The 270 deluxe hotel apartments are situated around a central open courtyard with the lotus restaurant as a waterside eye-catcher.

MARASA SAROVAR HOTEL
Architect: **SJK Architects, Mumbai**
Project management: **Sycone Consultancy, Banglore**
Project development: **Marasa Hospitality Pvt Ltd., Mumbai**
Fabricator: **UrbanARCH Sysfab Pvt.Ltd., Mumbai**
Reynaers systems: **ES 45Pa, CW 50**



SNAGOV, ROMANIA

The eleven-metre-long window section, which is entirely glazed, and the overhanging terrace offer an unobstructed view of Lake Snagov. At the rear of the modern villa, an equally large glass façade offers a phenomenal view of the forest. Various types of natural stone and wood have been used to create an atmospheric effect.

VILLA SNAGOV
Architect: **Dooi studio, Daniel Ciocazanu, Bucharest**
Main contractor: **Steda Residence, Bucharest**
Fabricator: **Romco System, Bucharest**
Reynaers systems: **CP 155-LS, CW 50**


COSMIN DRAGOMIR

LUANDA, ANGOLA

The two Loanda towers are a modern and cosmopolitan landmark located in the city of Luanda. Each of the towers contain 26 floors of residential units and offices. The five storey pedestal harbours housing facilities and a car park. Reynaers equipped the façade of the playful-looking right-hand tower with a tailored CW 50 solution.

LOANDA TOWERS
Architect: **Tiago Sallas and Ana Horta, WKK - Projectos e Gestão de Obras, Lda, Sintra**
Promoter/Owner: **Grupo JCG Angola**
Fabricator: **Cociga Angola**
Reynaers system: **bespoke solution based on CW 50**


JOÃO ARCANJO

REYNAERS ALUMINIUM N.V.
Oude Liersebaan 266 · 2570 Duffel · Belgium
t +32 (0)15 30 85 00 · f +32 (0)15 30 86 00
www.reynaers.com · info@reynaers.com

REYNAERS
aluminium

TOGETHER FOR BETTER

FSC