Intesis®
BY HMS NETWORKS

Gateways for building automation and HVAC control



Connecting sustainable buildings

HMS

Intesis
connecting buildings

At Intesis, the **Building Automation division of HMS Networks**, we specialize in developing advanced gateway solutions that simplify and enhance building integration.

With over **25 years of experience** and innovation, our technology is trusted worldwide for its reliability, performance, and ease of use.



Our product portfolio is structured around four main categories, each designed to address specific integration challenges in modern buildings:

- **HVAC Gateways**
- **Protocol Converter Gateways**
- **Air-to-Water Heat Pump Gateways**
- **Cloud Control Gateways**

About HMS Networks

With millions of installed products worldwide, HMS Networks is the leading supplier of solutions for Industrial ICT (Information & Communication Technology).

We enable valuable data and insights from industrial equipment, allowing our customers to increase productivity and sustainability.

- Employees: > 1100
- Operations: > 20 countries
- Distributors: > 50 countries
- Brands: Anybus, Ewon, Intesis, Ixxat, N-Tron, Red Lion, PEAK
- Customers: Device manufacturers, machine builders, system integrators, end users
- Year founded: 1988



High quality standards

Intesis products are subject to extensive testing and certification processes to ensure the highest quality standards. Also, additional tests are implemented for specific markets.

100% tested

Every product is tested on premises to ensure the highest quality standards.

UL listed

Intesis products contain UL marked components and the production line is subject to periodic UL audits. It is with pride that we put the UL mark on all main Intesis products.

Global coverage

In addition to rigorous internal quality tests, Intesis products are also certified by independant testing labs to fulfill national legal requirements on different markets.

Protocol certifications

All implementations of standard protocols in Intesis products are performed according to each protocol specification. Full interoperability is then ensured thanks to testing and certification by external accredited laboratories.

Optimize building automation and reduce energy consumption



HVAC Gateways

Designed to enhance performance and reduce energy consumption by up to 40%.

Cloud Control Gateways

Enabling remote HVAC system control via the cloud, with automation, alerts, and enhanced operational efficiency.



Protocol Converter Gateways

Enabling seamless integration of systems such as lighting, metering, EV chargers, and industrial devices.





Air-to-Water Heat Pump Gateways

Designed to optimize energy use by integrating air-to-water heat pumps into BMS for efficient heating, cooling, and hot water management.

Intesis has the solution for every project

Intesis MAPS
the configuration tool for Intesis products

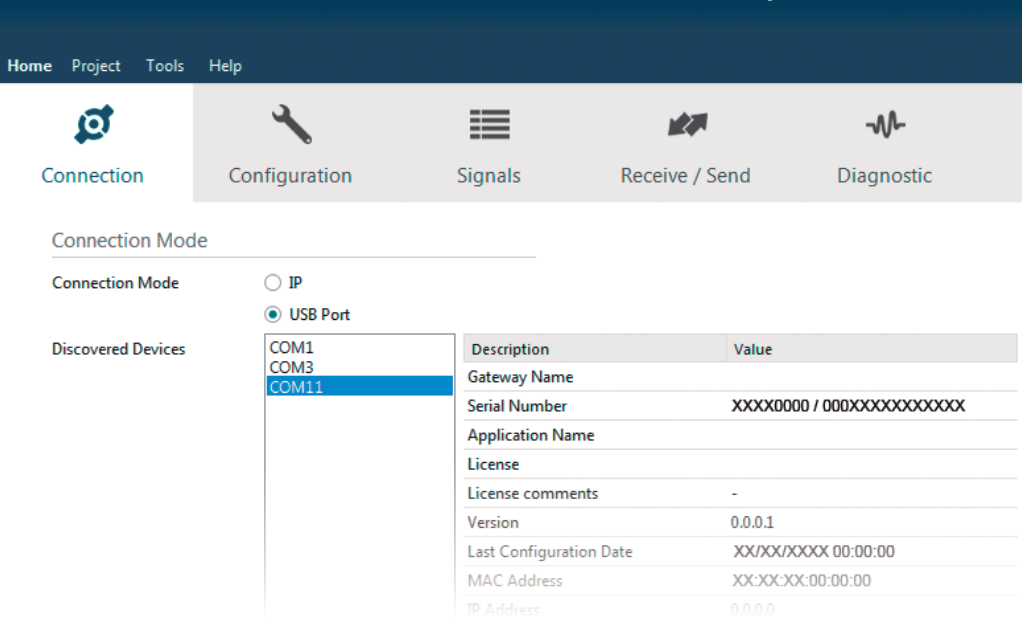

Intesis MAPS

It's an intuitive configuration tool for all Intesis gateways that helps reducing commisioning time.

Intesis MAPS enables easy configuration offering a simple and consistent way to program all gateways. Upon launching Intesis MAPS, the user selects the right template for the application they need and the configuration procedure can start.

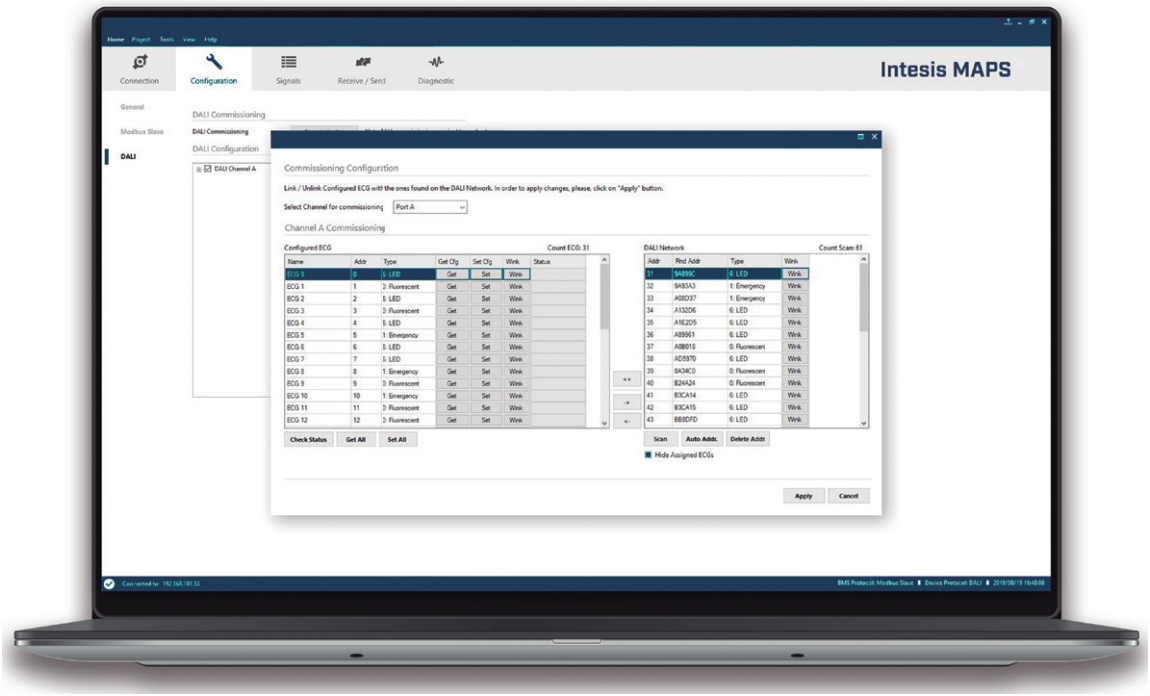

Multi **A**ddressing **P**oint **S**olution

Project templates

For every gateway there is a template providing a step by step setup guide for both protocols in the gateway.

Product templates

Product templates are provided for automatic import of all device data, removing the need for manual work.

Device scan

By using the scanning functionality, users can find devices in the field and import all their data automatically.

Data conversion

Data can be transformed into the desired format, e.g., adjusting offset, scaling or converting from degrees Celsius to Fahrenheit.

Diagnostics

Problems and errors can be detected and solved with Intesis MAPS diagnostics.

Secure and safe configuration

MAPS configuration projects are protected by passwords to prevent unauthorized manipulation of projects and installations.

Recovery

Users can save the gateway configuration project to file for e.g., recovery purposes or in case of gateway replacement.

Update information

The tool informs whenever there is a new software version available for the gateway or Intesis MAPS itself.



Be prepared for the integration process

Start your project remotely, no need to be on-site.

Intesis MAPS offers you the possibility of starting your projects even without the Intesis device. Simply start creating your configuration file from the field devices' manual and/or the BMS or SCADA engineer information.

Get everything ready before commissioning

Check your configuration, simulate communications, use our templates, consult our manuals, attend our webinars and get the most of our team experience in a powerful tool. Everything in its right place for a smooth commissioning process.

Template functionality

Thanks to our template functionality you can import already existing templates from third party devices* and include them in your project with a simple click of the mouse. Moreover, you can create your own templates and use them in any of your projects.

* Requires Internet connection.



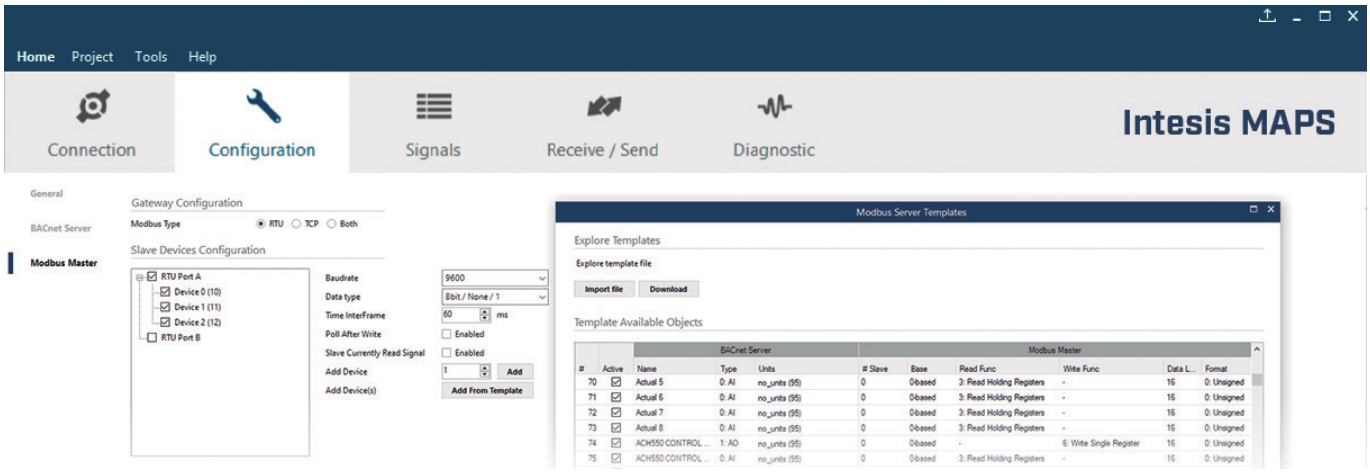

Fast, save and secure commissioning and troubleshooting

Even if you are not off-site, remote connections are available to the gateway through IP*, which ensures the possibility of testing the project during the commissioning stage. You can also troubleshoot any possible issue you might face from your office.

Save money and time with less travelling

A remote connection drastically reduces the need for travelling since commissioning or troubleshooting can be done from anywhere.

With four simple steps you will be ready to go:

1 Create your configuration project

2 Enable communications

3 Download the configuration

4 Test and/or troubleshoot

*Check with your IT department for more information about external communication configurations.

Perform the commissioning and troubleshooting anywhere

Protocol Converter Gateways

When choosing an Intesis Protocol Converter, you can be sure that you get a ready-to-use product which easily solves the complex task of integrating between building automation protocols.



Protocol Converter Gateways with the latest technology

Intesis Protocol Converter Gateways include the most recent and modern technology, assembled in user-friendly products to facilitate installation, configuration and deployment.

LED indicator matrix

Multiple LED indicators confirm that all protocols are communicating properly or indicate if there is a communication issue.

IP/USB console

Direct and safe access to the configuration via USB or the Ethernet port.

USB host

Configuration can be performed with the USB host port, from downloading projects or generating log files to updating the firmware.

Multiple ports

With multiple ports for the different physical layers (cable/network types), all common connectivity requirements are met.

Design for DIN-rail mounting

Using just five DIN-Rail modules, it is easy to fit Intesis Protocol Converter Gateways into cabinets.

Low power

The Protocol Converter Gateways are designed for low power consumption for energy efficient operation on-site.

Intesis MAPS Configuration

Powerful configuration of all Intesis Protocol Converter Gateways for a fast and straight-forward commissioning.

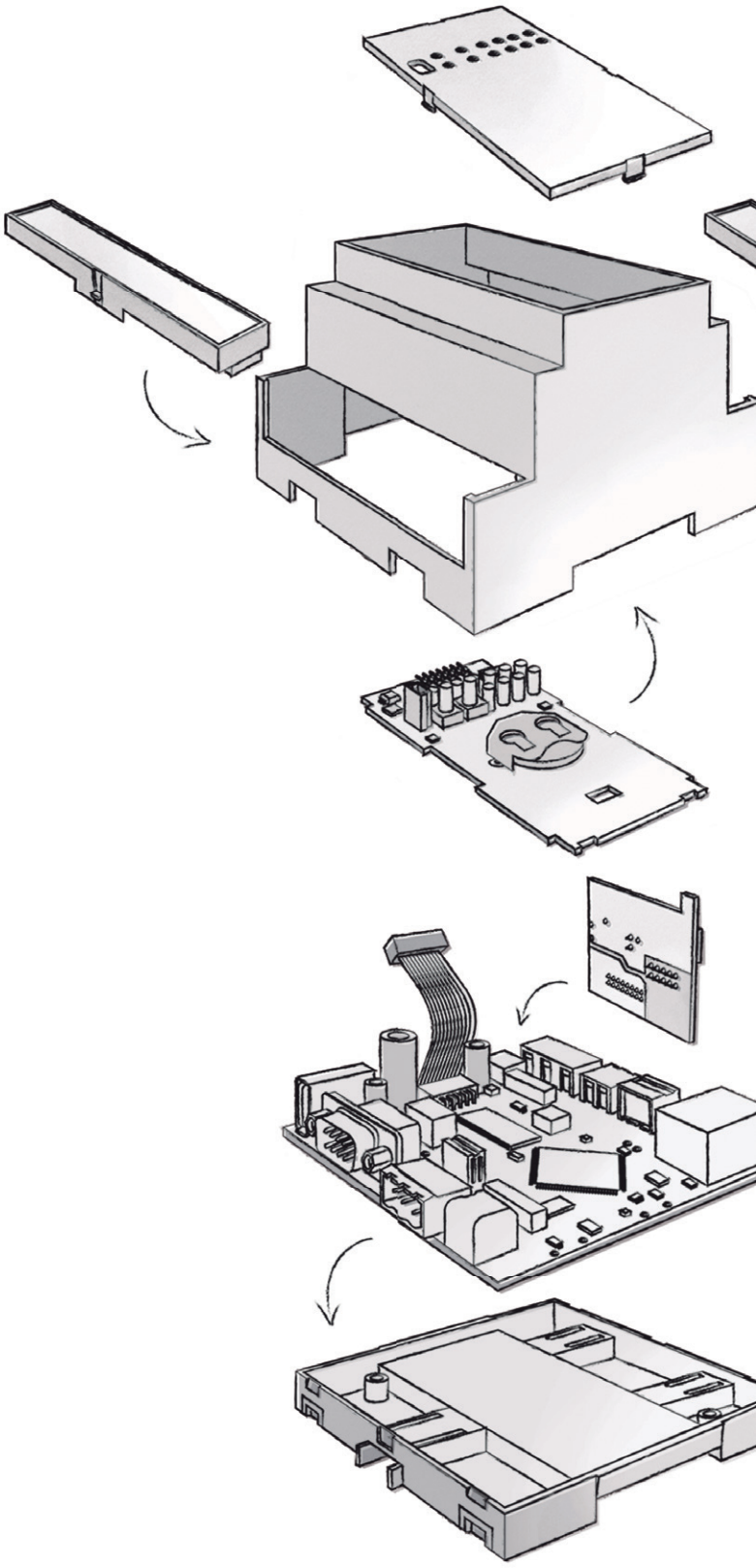

ASCII Protocol Converter Gateways

General features for ASCII

Supervision and control of BACnet or KNX devices can be done from an ASCII-based control system using simple ASCII messages over serial (EIA232, EIA485) or TCP/IP interfaces.

- Both ASCII Serial and IP supported
- Custom string signals
- Custom string commands
- Easy integration to any BMS

Application	Order Code	Point Versions
BACnet ▶ ASCII		
BACnet Client to ASCII server	**IN700485***0000**	**100, 250, 600, 1200, and 3000 P.V.**
KNX ▶ ASCII		
KNX to ASCII server	**IN701KNX***0000**	**100, 250, 600, 1200, and 3000 P.V.**

BACnet Protocol Converter Gateways

General features for BACnet

Intesis Protocol Converter Gateways for BACnet perform as a BACnet/IP Server or BACnet MS/TP server, allowing BACnet controllers to send subscription requests (COV) to read or write its internal communication objects.

- BTL certified
- BACnet/IP and MS/TP
- BBMD and Foreign Device
- Notification Classes

Application	Order Code	P.V. - Point Versions D.V. - Device Versions
KNX ◆▶ BACnet		
KNX to BACnet/IP or MS/TP server	**IN701KNX***0000**	**100, 250, 600, 1200, and 3000 P.V.**
Modbus ◆▶ BACnet		
Modus client to BACnet/IP or MS/TP server	**IN700485***0000**	**100, 250, 600, 1200, and 3000 P.V.**
DALI 2 ▶ BACnet		
DALI to BACnet/IP or MS/TP server	**IN703DAL0640000**	**64 D.V.**
DALI to BACnet/IP server	**IN704DAL1280000**	**128 D.V.**
DALI to BACnet/IP server	**INBACDAL0640500**	**64 D.V.**
M-Bus ▶ BACnet		
M-Bus, Modbus, and Digital Pulses to BACnet/IP or MS/TP server	**IN702MEB***0000**	**10, 20, 60, and 100 Meters**
M-Bus meters to BACnet/IP server	**IN712MEB0**0000**	**20 and 50 Meters**
BACnet ▶ BACnet		
BACnet MS/TP to BACnet/IP Router	**INBACRTR0320000**	**32 D.V.**
PROFINET ◆▶ BACnet		
BACnet - PROFINET server	**INBACPRT1K20000**	**1200 P.V.**
EtherNet/IP ◆▶ BACnet		
BACnet - EtherNet/IP server	**INBACEIP1K20000**	**1200 P.V.**

KNX Protocol Converter Gateways

General features for KNX

A Protocol Converter with KNX connects directly to the KNX TP-1 bus carrying the same configuration and operational characteristics as any other KNX device.

- Standard KNX Datapoint Types
- Extended group adresses
- Sending and listening addresses
- Ri flag: Read on initialization flag

Application	Order Code	P.V. - Point Versions D.V. - Device Versions
BACnet ⇔ KNX		
BACnet Client to KNX	**IN701KNX***0000**	**100, 250, 600, 1200, and 3000 P.V.**
KNX ⇔ KNX		
KNX IP Secure Router and Interface	**INKNXRTR0080000**	**8 IP tunneling connections simultaneously**
Modbus ⇔ KNX		
Modbus Client to KNX	**IN701KNX***0000**	**100, 250, 600, 1200, and 3000 P.V.**
Modbus RTU to KNX	**INKNXMBM1000200**	**100 P.V.**
DALI-2 ⇒ KNX		
DALI-2 to KNX TP PRO Gateway	**INKNXDAL0640300**	**64 D.V.**
M-Bus ⇒ KNX		
M-Bus, Modbus, and Digital Pulses to KNX	**IN702MEB***0000**	**10, 20, 60, and 100 Meters**

MQTT Protocol Converter Gateways

General features for MQTT

M-Bus, Modbus, and digital pulse meters can be monitored and controlled from a cloud platform via MQTT.

- Publish and subscribe actions are supported
- Templates for Azure, AWS, and generic cloud platforms
- Secure communication via SSL/TLS

Application	Order Code	Point Versions
NEW M-Bus ⇒ MQTT		
M-Bus, Modbus, and Digital Pulses to MQTT	**IN702MEB***0000**	**10, 20, 60, and 100 Meters**

Modbus Protocol Converter Gateways

General features for Modbus

The Modbus Protocol Converter Gateways act as TCP Servers (Ethernet connection) and/or Modbus RTU servers (serial EIA232,EIA485).

- Modbus TCP and RTU simultaneously
- Coils, holding registers and bitfields supported
- Multiple data formats
- Big-endian or Little-endian

Application	Order Code	P.V. - Point Versions D.V. - Device Versions
BACnet ◆ Modbus		
BACnet Client to Modbus server	**IN700485***0000**	**100, 250, 600, 1200, and 3000 P.V.**
KNX ◆ Modbus		
KNX to Modbus server	**IN701KNX***0000**	**100, 250, 600, 1200, and 3000 P.V.**
DALI ▶ Modbus		
DALI to Modbus TCP and RTU server	**IN703DAL0640000**	**64 D.V.**
DALI to Modbus TCP server	**IN704DAL1280000**	**128 D.V.**
DALI to Modbus TCP server	**INMBSDAL0640500**	**64 D.V.**
M-Bus ▶ Modbus		
M-Bus, Modbus, and Digital Pulses to Modbus TCP and RTU server	**IN702MEB***0000**	**10, 20, 60, and 100 Meters**
M-Bus meters to Modbus TCP	**IN712MEB0*00000**	**20 and 50 Meters**
Modbus ▶ Modbus		
Modbus RTU to Modbus TCP router	**INMBSRTR0320000**	**32 D.V.**
OCPP ▶ Modbus		
OCPP to Modbus TCP and RTU	**INMBSOCP***0100**	**1 and 20 Chargers**

HVAC Gateways

Intesis owns a wide portfolio of reliable gateways for HVAC control, developed with the support and collaboration of the HVAC makers, certified from the main protocols and for all markets. The devices are developed with the goal of reducing buildings energy consumption and improve user's comfort.



BOSCH
HITACHI
Panasonic
DAIKIN
LG
SAMSUNG
FUJITSU
Midea
TOSHIBA
Haier
MITSUBISHI ELECTRIC
YORK
Hisense
MITSUBISHI HEAVY INDUSTRIES, LTD.

Intesis — The right choice for HVAC integration

In 2006, Intesis launched the first certified product to integrate expansion air conditioning units into KNX. Today, after many years of experience and more than 2 millions HVAC units integrated around the world, Intesis can offer a wide range of Intesis AC Gateways for integrating air conditioners from major brands into all commonly used building automation protocols.

Energy efficient

HVAC systems account for a major part of the energy costs in a building. With the Intesis AC Gateways, these can be controlled for optimal energy usage, enabling significant savings.

Reliable

All developments are based strictly on AC manufacturers' specifications, with subsequent validation and approval by the AC manufacturers to ensure the right compatibility with their AC units.

Easy to use

Thanks to the smart scanning functionality, connected AC units can be detected automatically.

Trusted

AC Gateways from Intesis are trusted by system integrators all over the world, covering all major protocols needed within building automation.

Intesis AC Gateways — key features

One to one

All the info from one indoor unit directly to one AC gateway.

Multi-unit

Control multiple indoor units from a single AC gateway.

Brand specific products

Specific solutions for all major air conditioning brands.

Direct connection

Save costs by using AC Gateways that connect directly to the AC bus without any intermediate devices.

Universal IR solution

Supports any AC brand on the market that uses infrared (IR) remotes.

AC units scan

Save configuration time with the powerful scanning functionality.

Our expertise packaged in the best solution for you!



BACnet gateways for air conditioners

Intesis offers a large portfolio of BACnet gateways for integration of specific AC brands, supporting both BACnet/IP and BACnet MS/TP integrations with BTL certified solutions.

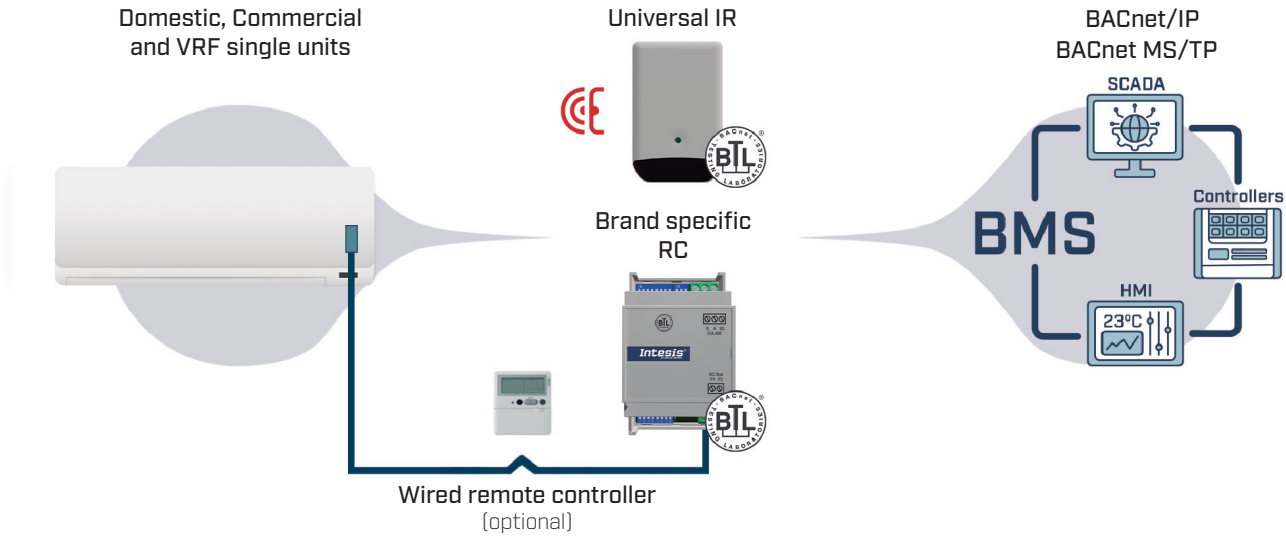

Specific features for one-to-one solutions

- Fast and easy configuration thanks to a dip switches.
- External power supply is not required since it is powered by the AC unit itself.
- Two types of solutions: Brand specific solutions with direct connections supporting the unit's error code data, and a universal solution based on infrared (IR) communication.

Specific features for multi-unit solutions

- Provides advanced BACnet functions such as notification class, trend logs or calendars.
- Controls all connected units from a single gateway.

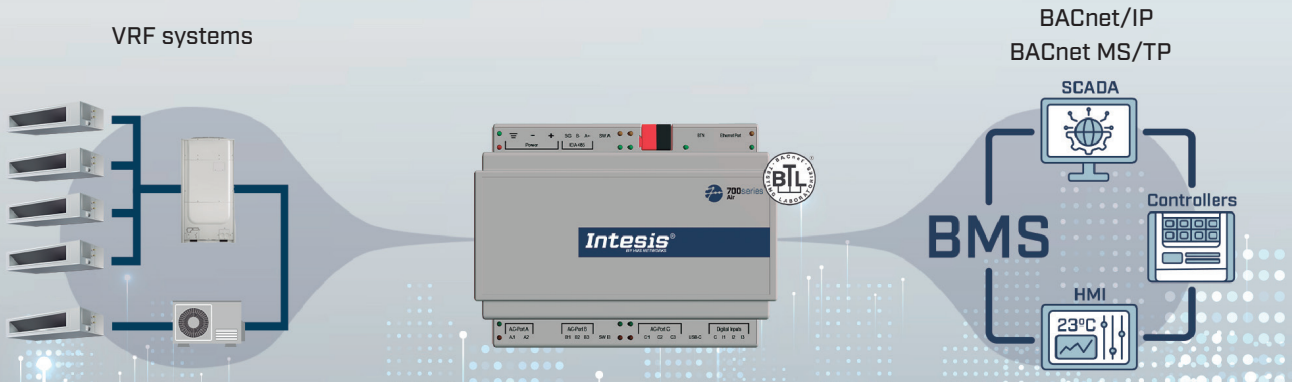

Application	Order Code	Indoor Units or Groups
BOSCH ▶ BACnet		
VRF systems to BACnet/IP or MS/TP	**IN770AIR***O000**	**4 I.U. (XXS), 16 I.U. (S), 64 I.U. (M)**
DAIKIN ▶ BACnet		
AC Domestic units to BACnet/IP or MS/TP	**INBACDAI001I000**	**1 I.U.**
AC Domestic units to BACnet MS/TP	**IN485DAI001I000**	**1 I.U.**
VRV and Sky systems to BACnet MS/TP	**IN485DAI001R000**	**1 I.U.**
VRV and Sky systems to BACnet/IP or MS/TP	**INBACDAI001R000**	**1 I.U.**
VRV systems to BACnet/IP or MS/TP	**IN770AIR***O000**	**4 I.U. (XXS), 16 I.U. (S), 64 I.U. (M)**
Haier ▶ BACnet		
MRV systems to BACnet/IP or MS/TP	**IN770AIR***O000**	**4 I.U. (XXS), 16 I.U. (S), 64 I.U. (M)**
FUJITSU ▶ BACnet		
RAC and VRF to BACnet MS/TP	**IN485FGL001I000**	**1 I.U.** *(to CN connector)*
VRF systems to BACnet/IP or MS/TP	**IN775FGL***O000**	**4 I.U. (XXS), 16 I.U. (S), 64 I.U. (M)**
Hisense ▶ BACnet		
VRF systems to BACnet/IP or MS/TP	**IN770AIR***O000**	**16 I.U. (S) and 64 I.U. (M)**
HITACHI ▶ BACnet		
VRF systems to BACnet/IP or MS/TP	**IN770AIR***O000**	**4 I.U. (XXS), 16 I.U. (S), 64 I.U. (M)**
Commercial and VRF systems to BACnet/IP or MS/TP	**INBACHIT001R000**	**1 I.U.**
VRF systems to BACnet MS/TP	**IN485HIT001R000**	**1 I.U.**
Midea ▶ BACnet		
Commercial and VRF to BACnet MS/TP	**INBACMID001I100**	**1 I.U.**
Commercial and VRF systems to BACnet/IP or MS/TP	**IN770AIR***O000**	**4 I.U. (XXS), 16 I.U. (S), 64 I.U. (M)**
MITSUBISHI ELECTRIC ▶ BACnet		
Domestic, Mr.Slim and City Multi to BACnet/IP or MS/TP	**INBACMIT001I000**	**1 I.U.**
Domestic, Mr.Slim and City Multi to BACnet MS/TP	**IN485MIT001I000**	**1 I.U.**
City Multi systems to BACnet/IP or MS/TP	**IN770AIR***O000**	**15 Groups (XXS), 50 Groups (S), 100 Groups (M)**
MITSUBISHI HEAVY INDUSTRIES, LTD. ▶ BACnet		
FD and VRF systems to BACnet/IP or MS/TP	**INBACMHI001R000**	**1 I.U.**
FD and VRF systems to BACnet MS/TP	**IN485MHI001R000**	**1 I.U.**
VRF systems to BACnet/IP or MS/TP	**IN776MHI***O000**	**4 I.U. (XXS), 16 I.U. (S), 64 I.U. (M), 128 I.U. (L)**
Panasonic ▶ BACnet		
Etherea AC units to BACnet/IP or MS/TP	**INBACPAN001I000**	**1 I.U.**
Etherea AC units to BACnet MS/TP	**IN485PAN001I000**	**1 I.U.**
ECOi and PACi systems to BACnet/IP or MS/TP	**INBACPAN001R000**	**1 I.U.**
ECOi and PACi systems to BACnet MS/TP	**INBACPAN001R100**	**1 I.U.**
ECOi, ECOg and PACi systems to BACnet/IP or MS/TP	**IN770AIR***O000**	**4 I.U. (XXS), 16 I.U. (S), 64 I.U. (M)**
ECOi, ECOg and PACi systems to BACnet/IP or MS/TP	**IN771AIR***O000**	**128 I.U. (L)**
SAMSUNG ▶ BACnet		
NEW *Samsung NASA systems to BACnet MS/TP*	**IN485SAM001R000**	**1 I.U.**
NASA VRF systems to BACnet/IP or MS/TP	**IN770AIR***O000**	**4 I.U. (XXS), 16 I.U. (S), 64 I.U. (M)**
TOSHIBA ▶ BACnet		
VRF and Digital systems to BACnet/IP or MS/TP	**INBACTOS001R000**	**1 I.U.**
VRF and Digital systems to BACnet MS/TP	**INBACTOS001R100**	**1 I.U.**
UNIVERSAL ▶ BACnet		
Universal IR air conditioner to BACnet MS/TP	**IN485UNI001I100**	**1 I.U.**
YORK ▶ BACnet		
VRF systems to BACnet MS/TP	**IN770AIR***O000**	**4 I.U. (XXS), 16 I.U. (S), 64 I.U. (M)**

KNX gateways for air conditioners

For the last decade, Intesis AC gateways for KNX have been the reference when it comes to integrate air conditioning systems into KNX projects. Specific solutions are offered for the most popular AC brands, including a universal solution based on infrared communication.

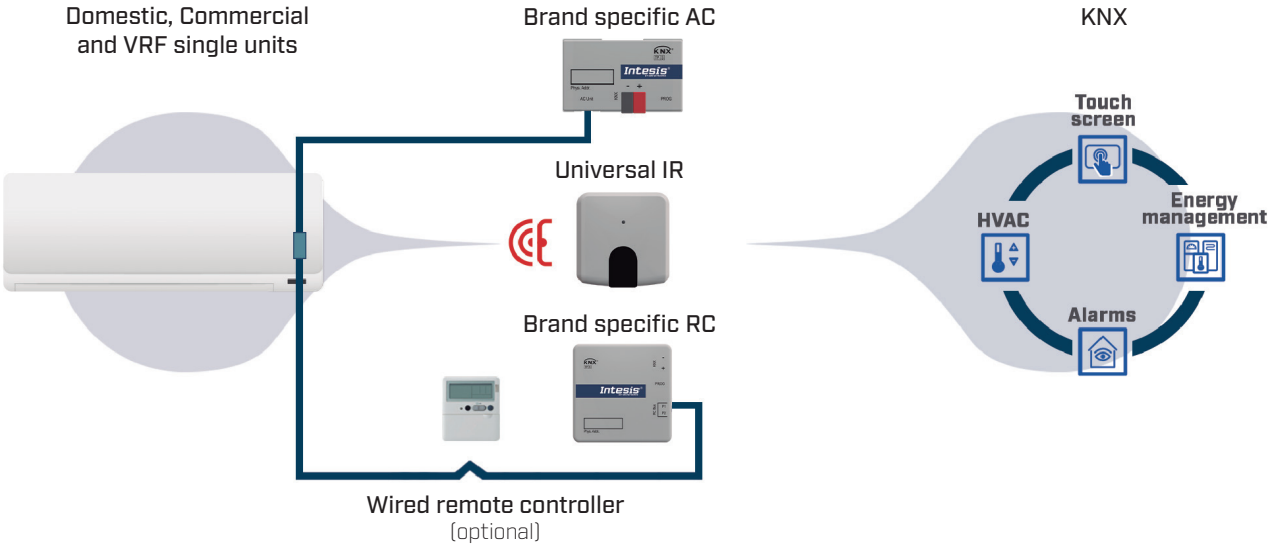

Specific features for one to one solutions

- Supports all required DPT objects to be compatible with all KNX thermostats in the market.
- Binary inputs for window contacts or presence detectors available.
- Two types of solutions: Brand specific solutions with direct connections supporting the unit's error code data, and a universal solution based on infrared (IR) communication.

Specific features for multi-unit solutions

- Smooth integration of KNX thermostats thanks to the "virtual temperature" function.
- Covers a wide range of standard DPTs which ensures interoperability with other KNX devices.



Application	Order Code	Indoor Units
BOSCH ▶ KNX		
VRF systems to KNX	**IN770AIR***O000**	**4 I.U. (XXS), 16 I.U. (S), 64 I.U. (M)**
DAIKIN ▶ KNX		
AC Domestic units to KNX	**INKNXDAI001I000**	**1 I.U.**
	INKNXDAI001I100	**1 I.U. with Binary Input**
VRV and Sky systems to KNX	**INKNXDAI001R000**	**1 I.U.**
	INKNXDAI001R100	**1 I.U. with Binary Input**
VRV systems to KNX	**IN770AIR***O000**	**4 I.U. (XXS), 16 I.U. (S), 64 I.U. (M)**
FUJITSU ▶ KNX		
RAC and VRF to KNX	**INKNXFGL001I000**	**1 I.U. with B.I.** *(to CN connector)*
RAC and VRF systems to KNX	**INKNXFGL001R000**	**1 I.U. with B.I.** *(to remote controller)*
VRF systems to KNX	**IN775FGL***O000**	**4 I.U. (XXS), 16 I.U. (S), 64 I.U. (M)**
Haier ▶ KNX		
MRV systems to KNX	**IN770AIR***O000**	**4 I.U. (XXS), 16 I.U. (S), 64 I.U. (M)**
Hisense ▶ KNX		
VRF systems to KNX	**INKNXHIS001R000**	**1 I.U. with Binary Input**
VRF systems to KNX	**IN770AIR***O000**	**4 I.U. (XXS), 16 I.U. (S), 64 I.U. (M)**
HITACHI ▶ KNX		
Commercial and VRF systems to KNX	**INKNXHIT001R000**	**1 I.U. with Binary Input**
VRF systems to KNX	**IN770AIR***O000**	**4 I.U. (XXS), 16 I.U. (S), 64 I.U. (M)**
LG ▶ KNX		
VRF systems to KNX	**INKNXLGE001R000**	**1 I.U. with Binary Input**
VRF systems to KNX	**INKNXLGE***O000**	**16 and 64 I.U.**
Midea ▶ KNX		
Commercial and VRF systems to KNX	**INKNXMID001I000**	**1 I.U.**
Commercial and VRF systems to KNX	**IN770AIR***O000**	**4 I.U. (XXS), 16 I.U. (S), 64 I.U. (M)**
MITSUBISHI ELECTRIC ▶ KNX		
Domestic, Mr.Slim, and City Multi to KNX	**INKNXMIT001I000**	**1 I.U.**
Domestic, Mr.Slim, City Multi, and Lossnay to KNX	**INKNXMIT001I100**	**1 I.U. with Binary Input**
NEW *Domestic, Mr.Slim, and City Multi to KNX*	**INKNXMIT001I200**	**1 I.U.**
City Multi systems to KNX	**IN770AIR***O000**	**15 Groups (XXS), 50 Groups (S), 100 Groups**
MITSUBISHI HEAVY INDUSTRIES, LTD. ▶ KNX		
FD and VRF systems to KNX	**INKNXMHI001R000**	**1 I.U. with Binary Input**
VRF systems to KNX	**IN776MHI***O000**	**4 I.U. (XXS), 16 I.U. (S), 64 I.U. (M), 128 I.U. (L)**
Panasonic ▶ KNX		
Etherea AC units to KNX unit	**INKNXPAN001I000**	**1 I.U. with Binary Input**
ECOi and PACi systems to KNX	**INKNXPAN001R000**	**1 I.U. with Binary Input**
ECOi, ECOg and PACi systems to KNX	**IN770AIR***O000**	**4 I.U. (XXS), 16 I.U. (S), 64 I.U. (M)**
ECOi, ECOg and PACi systems to KNX	**IN771AIR***O000**	**128 I.U. (L)**
SAMSUNG ▶ KNX		
NASA VRF systems to KNX	**IN770AIR***O000**	**4 I.U. (XXS), 16 I.U. (S), 64 I.U. (M)**
TOSHIBA ▶ KNX		
VRF and Digital systems to KNX	**INKNXTOS001R000**	**1 I.U. with Binary Input**
VRF systems to KNX	**INKNXTOS***O000**	**16 and 64 I.U.**
UNIVERSAL ▶ KNX		
Universal IR air conditioner to KNX TP	**INKNXUNI001I200**	**1 I.U. with 2 Binary Inputs**
YORK ▶ KNX		
VRF systems to KNX	**IN770AIR***O000**	**4 I.U. (XXS), 16 I.U. (S), 64 I.U. (M)**

Modbus gateways for air conditioners

Intesis AC gateways for Modbus form one of the largest portfolios on the market for integration of air conditioners into Modbus. The consistent Modbus register mapping used for all AC brands helps shortening the integration time in each project.

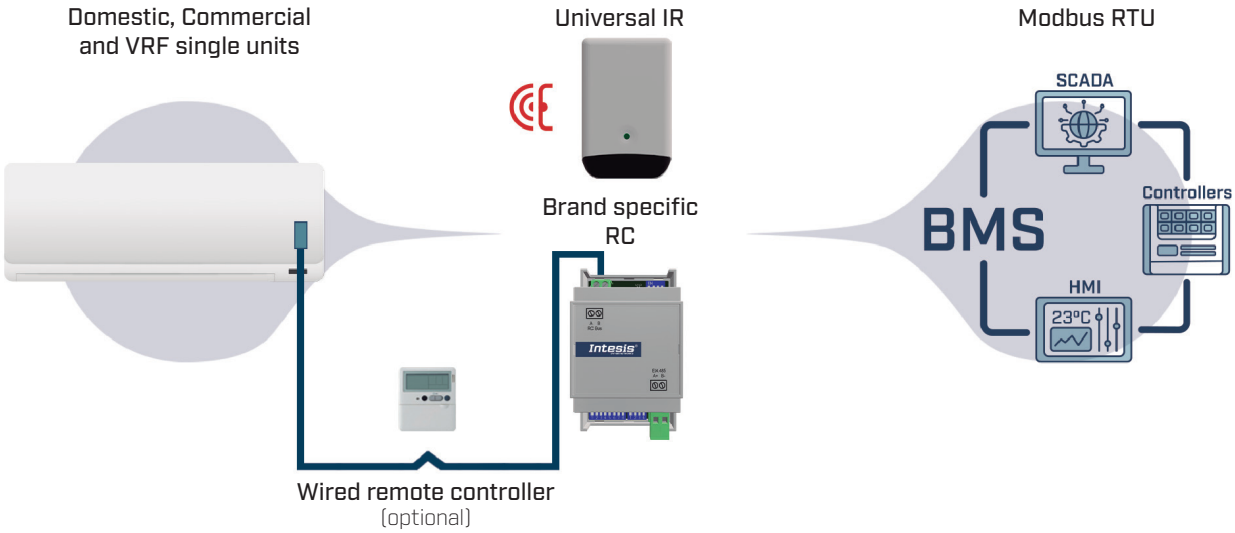

Specific features for one-to-one solutions

- Common Modbus register map regardless the AC brand.
- Fast and easy configuration thanks to DIP switches on the products.
- Two types of solutions: Brand specific solutions with direct connections supporting the unit's error code data, and a universal solution based on infrared (IR) communication.

Specific features for multi-unit solutions

- Supports both Modbus RTU and TCP simultaneously.
- Control all connected AC units from a single gateway.

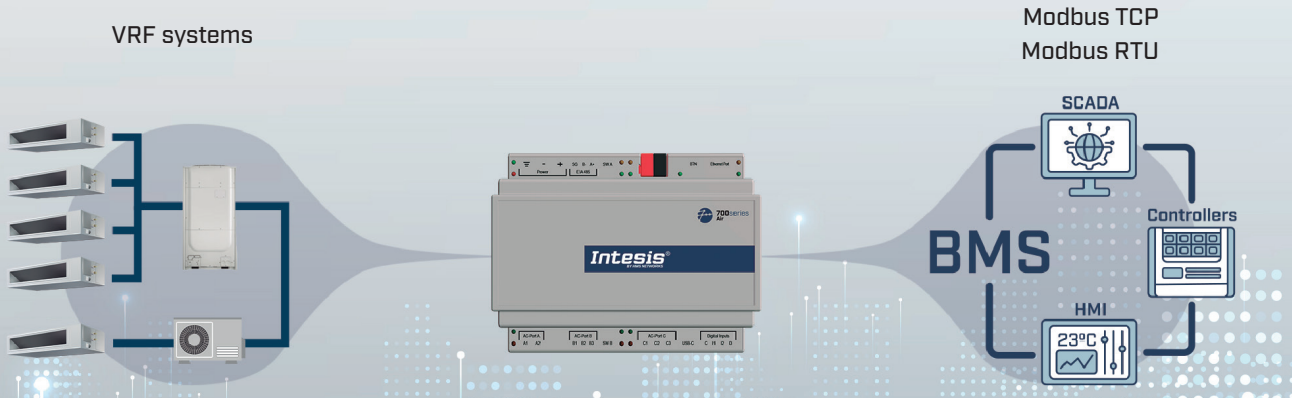

Application	Order Code	Indoor Units
BOSCH ▶ Modbus		
VRF systems to Modbus TCP/RTU	**IN770AIR***O000**	**4 I.U. (XXS), 16 I.U. (S), 64 I.U. (M)**
DAIKIN ▶ Modbus		
AC Domestic units to Modbus RTU	**INMBSDAI001I000**	**1 I.U.**
VRV and Sky systems to Modbus RTU	**IN485DAI001R000**	**1 I.U.**
VRV systems to Modbus TCP/RTU	**IN770AIR***O000**	**4 I.U. (XXS), 16 I.U. (S), 64 I.U. (M)**
FUJITSU ▶ Modbus		
RAC and VRF systems to Modbus RTU	**INMBSFGL001R000**	**1 I.U.** *(to remote controller)*
	IN485FGL001I000	**1 I.U.** *(to CN connector)*
VRF systems to Modbus TCP/RTU	**IN775FGL***O000**	**4 I.U. (XXS), 16 I.U. (S), 64 I.U. (M)**
Haier ▶ Modbus		
MRV systems to Modbus TCP	**IN770AIR***O000**	**4 I.U. (XXS), 16 I.U. (S), 64 I.U. (M)**
Hisense ▶ Modbus		
VRF systems to Modbus RTU	**INMBSHIS001R000**	**1 I.U.**
VRF systems to Modbus TCP/RTU	**IN770AIR***O000**	**4 I.U. (XXS), 16 I.U. (S), 64 I.U. (M)**
HITACHI ▶ Modbus		
Commercial and VRF systems to Modbus RTU	**IN485HIT001R000**	**1 I.U.**
VRF systems to Modbus TCP/RTU	**IN770AIR***O000**	**4 I.U. (XXS), 16 I.U. (S), 64 I.U. (M)**
LG ▶ Modbus		
VRF systems to Modbus RTU	**INMBSLGE001R000**	**1 I.U.**
Midea ▶ Modbus		
Commercial and VRF systems to Modbus RTU	**INMBSMID001I000**	**1 I.U.**
Commercial and VRF systems to Modbus RTU	**IN770AIR***O000**	**4 I.U. (XXS), 16 I.U. (S), 64 I.U. (M)**
MITSUBISHI ELECTRIC ▶ Modbus		
Domestic, Mr. Slim and City Multi lines to Modbus RTU	**INMBSMIT001I000**	**1 I.U.**
City Multi systems to Modbus TCP/RTU	**IN770AIR***O000**	**15 Groups (XXS), 50 Groups (S), 100 Groups**
MITSUBISHI HEAVY INDUSTRIES, LTD. ▶ Modbus		
FD and VRF systems to Modbus RTU	**INMBSMHI001R000**	**1 I.U.**
VRF systems to Modbus TCP/RTU	**IN776MHI***O000**	**4 I.U. (XXS), 16 I.U. (S), 64 I.U. (M), 128 I.U. (L)**
Panasonic ▶ Modbus		
Etherea AC units to Modbus RTU	**INMBSPAN001I100**	**1 I.U.**
ECOi and PACi systems to Modbus RTU	**INMBSPAN001R000**	**1 I.U.**
ECOi, ECOg and PACi systems to Modbus TCP/RTU	**IN770AIR***O000**	**4 I.U. (XXS), 16 I.U. (S), 64 I.U. (M)**
ECOi, ECOg and PACi systems to Modbus TCP/RTU	**IN771AIR***O000**	**128 I.U. (L)**
SAMSUNG ▶ Modbus		
NEW *Samsung NASA systems to Modbus RTU*	**IN485SAM001R000**	**1 I.U.**
NON-NASA units to Modbus RTU	**INMBSSAM001R000**	**1 I.U.**
NASA VRF systems to Modbus TCP/RTU	**IN770AIR***O000**	**4 I.U. (XXS), 16 I.U. (S), 64 I.U. (M)**
TOSHIBA ▶ Modbus		
VRF and Digital systems to Modbus RTU	**INMBSTOS001R000**	**1 I.U.**
UNIVERSAL ▶ Modbus		
Universal IR air conditioner to Modbus RTU	**IN485UNI001I100**	**1 I.U.**
YORK ▶ Modbus		
VRF systems to Modbus RTU	**IN770AIR***O000**	**4 I.U. (XXS), 16 I.U. (S), 64 I.U. (M)**

MQTT gateways for air conditioners

The addition of the MQTT protocol to the Intesis 700 Series Air gateways provides an unprecedented level of flexibility. By using this lightweight communication protocol, the gateway can connect securely to an MQTT broker and transmit status data from the HVAC units to virtually any MQTT client, as well as receive commands from them.

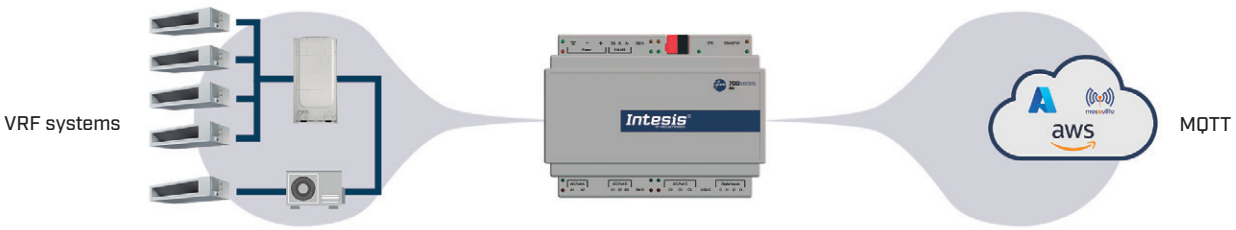

Specific features for multi-unit solutions

- Support for the most widely used cloud platforms: AWS IoT Core, Azure IoT Hub, and other generic options such as Mosquitto. Direct ethernet connection to the home's local IP network.
- Secure connection through SSL/TSL. Certificate management is handled through the Intesis MAPS configuration tool.
- Detailed information about MQTT traffic is available through the MAPS Diagnostic section.

MQTT Cloud Platforms:

Microsoft Azure

Amazon Web Services

Mosquitto broker

Application	Order Code	Indoor Units
BOSCH ▶ MQTT		
NEW *VRF systems to MQTT*	**IN770AIR***O000**	**4 I.U. (XXS), 16 I.U. (S), 64 I.U. (M)**
DAIKIN ▶ MQTT		
NEW *VRV systems to MQTT*	**IN770AIR***O000**	**4 I.U. (XXS), 16 I.U. (S), 64 I.U. (M)**
FUJITSU ▶ MQTT		
NEW *VRF systems to MQTT*	**IN775FGL***O000**	**4 I.U. (XXS), 16 I.U. (S), 64 I.U. (M)**
Haier ▶ MQTT		
NEW *MRV systems to MQTT*	**IN770AIR***O000**	**4 I.U. (XXS), 16 I.U. (S), 64 I.U. (M)**
Hisense ▶ MQTT		
NEW *VRF systems to MQTT*	**IN770AIR***O000**	**4 I.U. (XXS), 16 I.U. (S), 64 I.U. (M)**
HITACHI ▶ MQTT		
NEW *VRF systems to MQTT*	**IN770AIR***O000**	**4 I.U. (XXS), 16 I.U. (S), 64 I.U. (M)**
Midea ▶ MQTT		
NEW *Commercial and VRF systems to MQTT*	**IN770AIR***O000**	**4 I.U. (XXS), 16 I.U. (S), 64 I.U. (M)**
MITSUBISHI ELECTRIC ▶ MQTT		
NEW *City Multi systems to MQTT*	**IN770AIR***O000**	**15 Groups (XXS), 50 Groups (S), 100 Groups**
MITSUBISHI HEAVY INDUSTRIES, LTD. ▶ MQTT		
NEW *VRF systems to MQTT*	**IN776MHI***O000**	**4 I.U. (XXS), 16 I.U. (S), 64 I.U. (M), 128 I.U. (L)**
Panasonic ▶ MQTT		
NEW *ECOi, ECOg and PACi systems to MQTT*	**IN770AIR***O000**	**4 I.U. (XXS), 16 I.U. (S), 64 I.U. (M)**
NEW *ECOi, ECOg and PACi systems to MQTT*	**IN771AIR***O000**	**128 I.U. (L)**
SAMSUNG ▶ MQTT		
NEW *NASA VRF systems to MQTT*	**IN770AIR***O000**	**4 I.U. (XXS), 16 I.U. (S), 64 I.U. (M)**
YORK ▶ MQTT		
NEW *VRF systems to MQTT*	**IN770AIR***O000**	**4 I.U. (XXS), 16 I.U. (S), 64 I.U. (M)**

Home Automation gateways for air conditioners

Intesis Home Automation gateways have been specifically designed for AC integration into Home Automation systems. The communication is based on a simple ASCII protocol that can be easily implemented as a driver in home controllers or smart hubs. With drivers already available from many Home Automation platforms on the market, air conditioning units can be easily integrated and controlled.

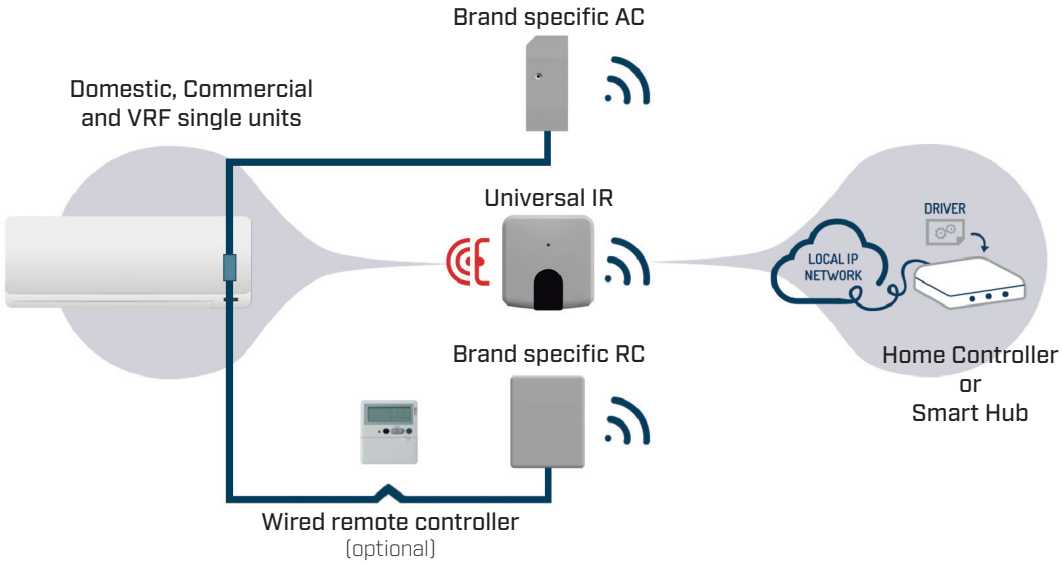

Available drivers

Specific features for one-to-one solutions

- Wi-Fi configuration supporting both dynamic or static IPs.
- Auto-discovering of Wi-Fi devices installed in the network.
- Two types of solutions: Brand specific solutions with direct connections supporting the unit's error code data, and a universal solution based on infrared (IR) communication.

Specific features for multi-unit solutions

- Integrate up to 128 AC units with a single gateway.
- Direct ethernet connection to the home's local IP network.
- All the benefits of having Intesis MAPS as configuration and diagnostic tool.

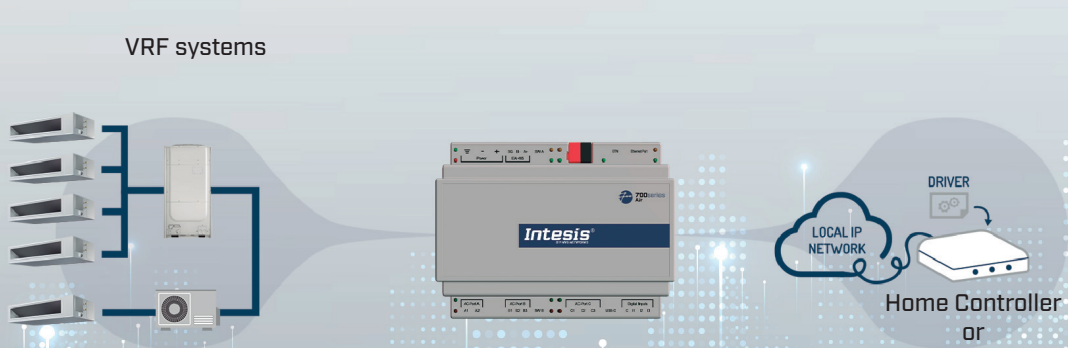

Available drivers

Application	Order Code	Indoor Units
BOSCH ▸ Home Automation		
VRF systems to Home Automation	**IN770AIR***O000**	**4 I.U. (XXS), 16 I.U. (S), 64 I.U. (M)**
DAIKIN ▸ Home Automation		
AC Domestic units to Home Automation	**INWMPDAI001I000**	**1 I.U.**
VRV and Sky systems to Home Automation	**INWMPDAI001R000**	**1 I.U.**
VRV systems to Home Automation	**IN770AIR***O000**	**4 I.U. (XXS), 16 I.U. (S), 64 I.U. (M)**
FUJITSU ▸ Home Automation		
RAC and VRF systems to Home Automation	**INWMPFGL001R000**	**1 I.U.** *(to remote controller)*
	INWMPFGL001I000	**1 I.U.** *(to CN connector)*
VRF systems to Home Automation	**IN775FGL***O000**	**4 I.U. (XXS), 16 I.U. (S), 64 I.U. (M)**
LG ▸ Home Automation		
VRF systems to Home Automation	**INWMPLGE001R000**	**1 I.U.**
Haier ▸ Home Automation		
NEW *MRV systems to Home Automation*	**IN770AIR***O000**	**4 I.U. (XXS), 16 I.U. (S), 64 I.U. (M)**
Hisense ▸ Home Automation		
VRF systems to Home Automation	**IN770AIR***O000**	**4 I.U. (XXS), 16 I.U. (S), 64 I.U. (M)**
HITACHI ▸ Home Automation		
VRF systems to Home Automation	**IN770AIR***O000**	**4 I.U. (XXS), 16 I.U. (S), 64 I.U. (M)**
Midea ▸ Home Automation		
Commercial and VRF systems to Home Automation	**IN770AIR***O000**	**4 I.U. (XXS), 16 I.U. (S), 64 I.U. (M)**
MITSUBISHI ELECTRIC ▸ Home Automation		
Domestic, Mr.Slim and City Multi to Home Automation	**INWMPMIT001I000**	**1 I.U.**
City Multi systems to Home Automation	**IN770AIR***O000**	**15 Groups (XXS), 50 Groups (S), 100 Groups**
MITSUBISHI HEAVY INDUSTRIES, LTD. ▸ Home Automation		
FD and VRF systems to Home Automation	**INWMPMHI001R000**	**1 I.U.**
Domestic units to Home Automation	**INWMPMHI001I000**	**1 I.U.**
VRF systems to Home Automation	**IN776MHI***O000**	**4 I.U. (XXS), 16 I.U. (S), 64 I.U. (M), 128 I.U. (L)**
Panasonic ▸ Home Automation		
Etherea AC units to Home Automation	**INWMPPAN001I000**	**1 I.U.**
ECOi and PACi systems to Home Automation	**INWMPPAN001R000**	**1 I.U.**
ECOi, ECOg and PACi systems to Home Automation	**IN770AIR***O000**	**4 I.U. (XXS), 16 I.U. (S), 64 I.U. (M)**
ECOi, ECOg and PACi systems to Home Automation	**IN771AIR***O000**	**128 I.U. (L)**
SAMSUNG ▸ Home Automation		
NASA VRF systems to Home Automation	**IN770AIR***O000**	**4 I.U. (XXS), 16 I.U. (S), 64 I.U. (M)**
TOSHIBA ▸ Home Automation		
VRF and Digital systems to Home Automation	**INWMPTOS001R000**	**1 I.U.**
UNIVERSAL ▸ Home Automation		
Universal IR air conditioner to Home Automation	**INWMPUNI001I000**	**1 I.U.**
YORK ▸ Home Automation		
VRF systems to Home Automation	**IN770AIR***O000**	**4 I.U. (XXS), 16 I.U. (S), 64 I.U. (M)**

Air-to-Water Heat Pump Gateways

Air-to-water heat pumps are the most efficient systems for domestic hot water, heating, and cooling in any building. However, its efficiency can be remarkably increased when the air-to-water heat pump system is integrated into a building management system (BMS).



atlantic
Haier
NIBE
BAXI
HITACHI
Panasonic
Carrier
LG
SAMSUNG
DAIKIN
Midea
STIEBEL ELTRON
Ferroli
MITSUBISHI ELECTRIC
GREE
MITSUBISHI HEAVY INDUSTRIES, LTD.

Get more from your heat pump—with less energy

Intesis' Air-to-Water heat pump gateways bridge heat pump systems with leading Building Management Systems (BACnet, KNX, or Modbus), delivering full interoperability. Facilitate rich monitoring and control enabling access to internal unit variables like flow temperature, compressor status, DHW circuits, fan speeds, alarm codes, and setpoints.

Precise Integration

Specific signals for domestic hot water and climatization ensure an accurate and efficient AW system control.

Fast configuration

DIP switches or user-friendly software tools allow for quick commissioning and troubleshouting.

Reliable performance

Developed and tested in collaboration with the leading manufacturers ensuring total interoperability.

Intesis expertise

Trusted by system integrators worldwide, with a world-class customer service.

One-to-one solutions

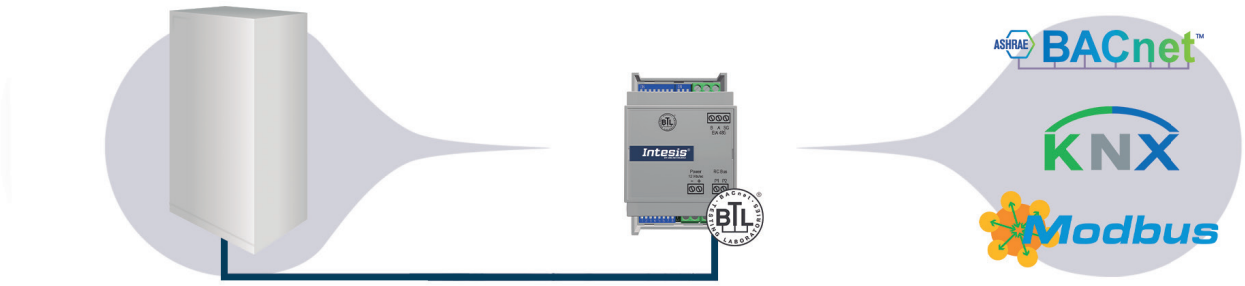

A2W Systems

Multi-unit solutions

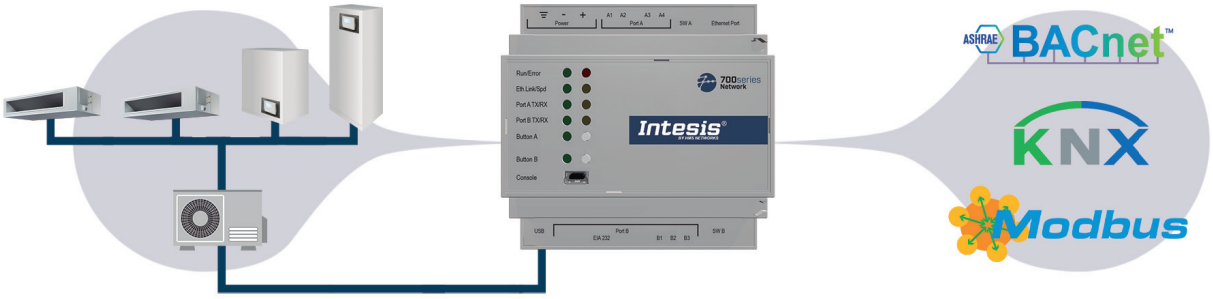

VRF & A2W Systems

Cascade Controller

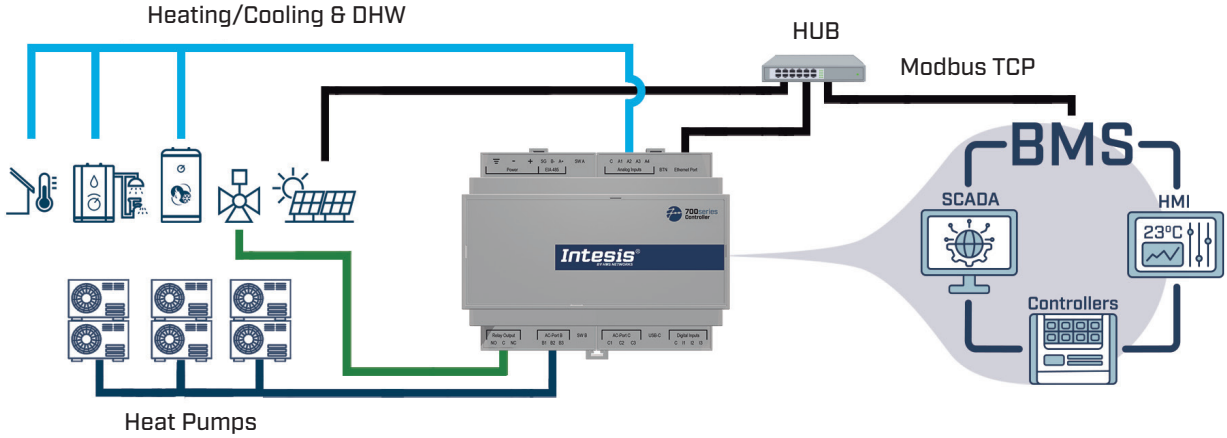

BACnet Air-to-Water Heat Pump Gateways

General features for BACnet

Intesis gateways for Air-to-Water systems support BACnet/IP and MS/TP, enabling smooth integration with building automation systems. Acting as BACnet server devices, they allow full control of domestic hot water and climatization features.

- BTL certified
- BACnet/IP and MS/TP
- BBMD and foreign Device
- Notification Classes

Application	Order Code	Indoor Units
atlantic ▶ BACnet		
NEW *APTAE and Áurea to BACnet/IP*	**IN790ATW100A000**	**5 AW.U.**
BAXI ▶ BACnet		
NEW *PBM3 and PBM4 to BACnet/IP*	**IN790ATW100A000**	**5 AW.U.**
Carrier ▶ BACnet		
NEW *Aquasnap Domestic to BACnet/IP*	**IN790ATW100A000**	**5 AW.U.**
DAIKIN ▶ BACnet		
Daikin air-to-water (Altherma 3) to BACnet MS/TP	**IN485DAI001A000**	**1 AW.U.**
Daikin HVAC systems to BACnet/IP or MS/TP	**IN770AIR***O000**	**4 AW.U. (XXS), 16 AW.U. (S), 64 AW.U. (M)**
NEW *Altherma 4 to BACnet/IP or MS/TP*	**IN790ATW100A000**	**5 AW.U.**
Ferroli ▶ BACnet		
NEW *Omnia to BACnet/IP*	**IN790ATW100A000**	**5 AW.U.**
Haier ▶ BACnet		
NEW *Water heat pumps to BACnet/IP*	**IN790ATW100A000**	**5 AW.U.**
HITACHI ▶ BACnet		
NEW *Yutaki, Yutampo, AIRH2O, and YCC systems to BACnet/IP or MS/TP*	**IN770AIR***O000**	**4 AW.U. (XXS), 16 AW.U. (S), 64 AW.U. (M)**
GREE ▶ BACnet		
NEW *Versati to BACnet/IP*	**IN790ATW100A000**	**5 AW.U.**
LG ▶ BACnet		
NEW *Therma V to BACnet/IP*	**IN790ATW100A000**	**5 AW.U.**
Midea ▶ BACnet		
NEW *Water heat pumps to BACnet/IP*	**IN790ATW100A000**	**5 AW.U.**
MITSUBISHI HEAVY INDUSTRIES, LTD. ▶ BACnet		
NEW *Q-Ton to BACnet/IP*	**IN790ATW100A000**	**5 AW.U.**
MITSUBISHI ELECTRIC ▶ BACnet		
Mitsubishi air-to-water (Ecodan) to BACnet MS/TP	**IN485MIT001A000**	**1 AW.U.**
City Multi, Ecodan and Lossnay to BACnet/IP or MS/TP	**IN770AIR***O000**	**15 Groups (XXS), 50 Groups (S), 100 Groups (M)**
NIBE ▶ BACnet		
NEW *Water heat pumps to BACnet/IP or MS/TP*	**IN790ATW100A000**	**5 AW.U.**
SAMSUNG ▶ BACnet		
EHS, ERV and DVM to BACnet/IP or MS/TP	**IN770AIR***O000**	**4 AW.U. (XXS), 16 AW.U. (S), 64 AW.U. (M)**
STIEBEL ELTRON ▶ BACnet		
NEW *Water heat pumps to BACnet/IP or MS/TP*	**IN790ATW100A000**	**5 AW.U.**

KNX Air-to-Water Heat Pump Gateways

General features for KNX

Intesis gateways for Air-to-Water systems connect directly to the KNX TP-1 bus, behaving like any native KNX device. This ensures fast integration and reliable communication within KNX-based building automation systems.

- Standard KNX Datapoint Types
- Extended group adresses
- Sending and listening addresses
- Ri flag: Read on initialization flag

Application	Order Code	Indoor Units
atlantic ▶ KNX		
NEW *APTAE and Áurea to KNX*	IN790ATW100A000	5 AW.U.
BAXI ▶ KNX		
NEW *PBM3 and PBM4 to KNX*	IN790ATW100A000	5 AW.U.
Carrier ▶ KNX		
NEW *Aquasnap Domestic to KNX*	IN790ATW100A000	5 AW.U.
DAIKIN ▶ KNX		
Daikin HVAC systems to KNX	IN770AIR***O000	4 AW.U. (XXS), 16 AW.U. (S), 64 AW.U. (M)
NEW *Altherma 4 to KNX*	IN790ATW100A000	5 AW.U.
Ferroli ▶ KNX		
NEW *Omnia to KNX*	IN790ATW100A000	5 AW.U.
Haier ▶ KNX		
NEW *Water heat pumps to KNX*	IN790ATW100A000	5 AW.U.
HITACHI ▶ KNX		
NEW *Air-to-water to KNX*	INKNXHIT001A000	1 AW.U.
NEW *Yutaki, Yutampo, AIRH2O, and YCC systems to KNX*	IN770AIR***O000	4 AW.U. (XXS), 16 AW.U. (S), 64 AW.U. (M)
GREE ▶ KNX		
NEW *Versati to KNX*	IN790ATW100A000	5 AW.U.
LG ▶ KNX		
VRF systems to KNX	INKNXLGE***O000	16 and 64 I.U.
NEW *Therma V to KNX*	IN790ATW100A000	5 AW.U.
Midea ▶ KNX		
NEW *Water heat pumps to KNX*	IN790ATW100A000	5 AW.U.
MITSUBISHI ELECTRIC ▶ KNX		
Ecodan to KNX	INKNXMIT001A200	1 AW.U.
City Multi, Ecodan and Lossnay to KNX	IN770AIR***O000	15 Groups (XXS), 50 Groups (S), 100 Groups
MITSUBISHI HEAVY INDUSTRIES, LTD. ▶ KNX		
Q-Ton to KNX	IN790ATW100A000	5 AW.U.
NIBE ▶ KNX		
NEW *Water heat pumps to KNX*	IN790ATW100A000	5 AW.U.
Panasonic ▶ KNX		
Air-to-water (Aquarea H/J/K/L/M) to KNX	INKNXPAN001A100	1 AW.U.
SAMSUNG ▶ KNX		
EHS, ERV and DVM to KNX	IN770AIR***O000	4 AW.U. (XXS), 16 AW.U. (S), 64 AW.U. (M)
STIEBEL ELTRON ▶ KNX		
NEW *Water heat pumps to KNX*	IN790ATW100A000	5 AW.U.

Modbus Air-to-Water Heat Pump Gateways

General features for Modbus

Intesis gateways for Air-to-Water systems support both Modbus TCP and RTU, enabling easy integration with a wide range of industrial and building automation systems. They act as Modbus TCP Servers over Ethernet and/or Modbus RTU Clients over serial connections.

- Modbus TCP and RTU simultaneously
- Coils, holding registers and bitfields supported
- Multiple data formats
- Big-endian or Little-endian

Application	Order Code	Indoor Units
DAIKIN ▶ Modbus		
Daikin Air-to-Water (Altherma 3) to Modbus RTU	**IN485DAI001A000**	**1 AW.U.**
Daikin HVAC systems to Modbus TCP/RTU	**IN770AIR***O000**	**4 AW.U. (XXS), 16 AW.U. (S), 64 AW.U. (M)**
HITACHI ▶ Modbus		
NEW *Yutaki, Yutampo, AIRH2O, and YCC systems to Modbus TCP/RTU*	**IN770AIR***O000**	**4 AW.U. (XXS), 16 AW.U. (S), 64 AW.U. (M)**
MITSUBISHI ELECTRIC ▶ Modbus		
Mitsubishi Air-to-Water (Ecodan) to Modbus RTU	**IN485MIT001A000**	**1 AW.U.**
City Multi, Ecodan and Lossnay to Modbus TCP/RTU	**IN770AIR***O000**	**15 Groups (XXS), 50 Groups (S), 100 Groups**
Panasonic ▶ Modbus		
Air-to-Water (Aquarea H/J/K/L/M) to Modbus RTU	**INMBSPAN001A100**	**1 AW.U.**
SAMSUNG ▶ Modbus		
EHS, ERV and DVM to Modbus TCP/RTU	**IN770AIR***O000**	**4 AW.U. (XXS), 16 AW.U. (S), 64 AW.U. (M)**
Cascade Controller for Samsung Eco Heating Systems (EHS) & VRF Systems (HE/HT)	**IN780CTR0XSO000**	**8 AW.U. (XS)**

Experience smarter and sustainable Air-to-Water Heat Pump control with the Intesis Cascade Controller

Based on input from tank sensors, the controller determines which units to activate in order to maintain tank temperatures as close as possible to the desired setpoint, while optimizing overall system efficiency.

With the Intesis Cascade Controller, you unlock the full potential of multi-unit air-to-water heat pump systems.

Precise operation

Ensure indoor comfort by adjusting the heat pump operation based on real-time outdoor and tank temperature data.

Compatibility

Support up to 8 air-to-water heat pumps in cascade - split, monoblock, or hidrokits - that can be combined on the same network.

Group Control, Ready for BMS

Support heating, cooling, and DHW in diverse installations with BMS integration and fallback mechanisms, ensuring future-ready performance.

Energy Efficiency

Optimize energy use with adaptive algorithms, heating curves, and photovoltaic (PV) integration, thereby reducing consumption and operational costs.

Application	Order Code	Indoor Units
SAMSUNG ▶ Modbus		
Cascade Controller for Samsung Eco Heating Systems (EHS) & VRF Systems (HE/HT)	**IN780CTR0XSO000**	**8 AW.U. (XS)**

Integration Example of a Typical Cascade Controller Installation

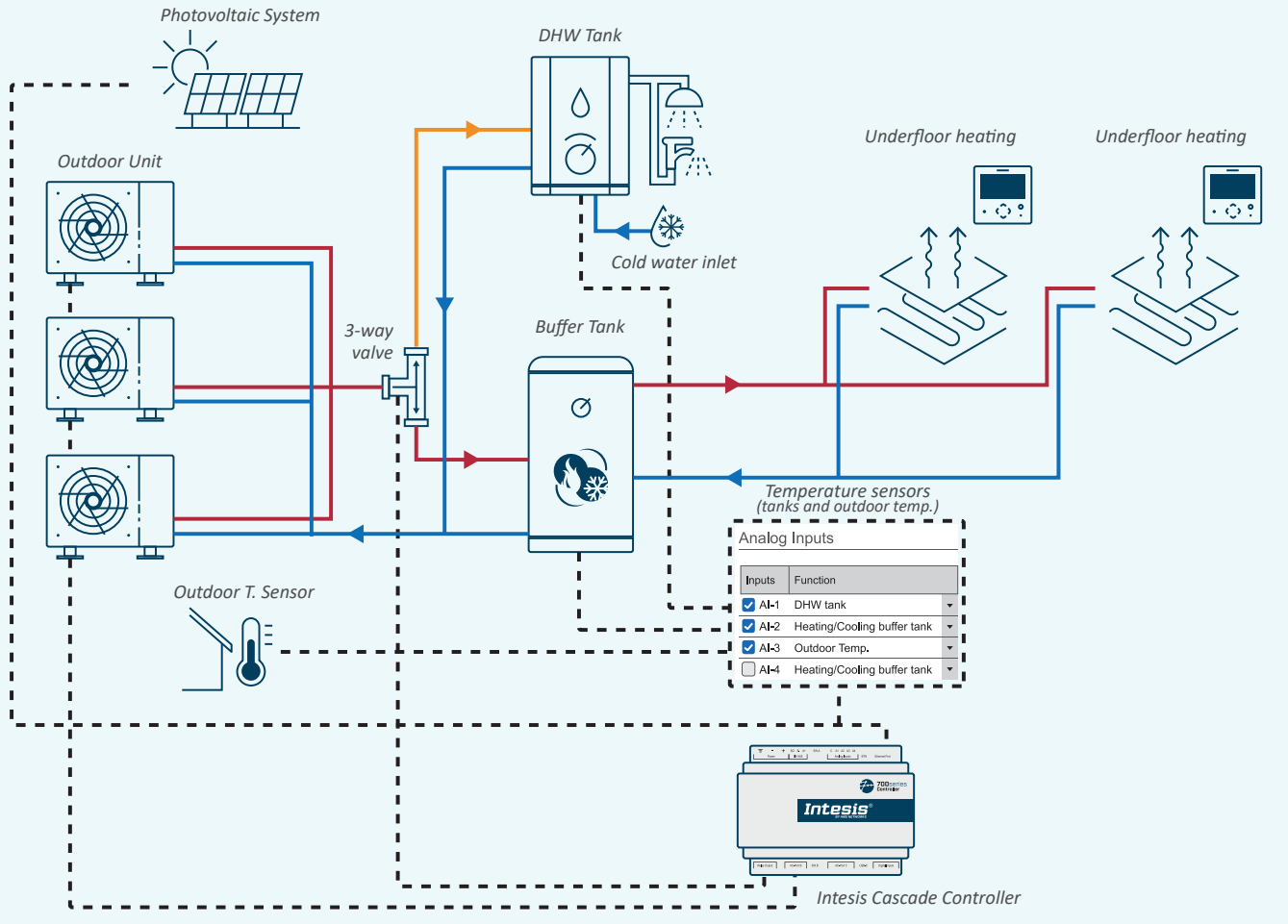

**Secondary circuit control is not included*

Cloud Control Gateways

Intesis brings extensive experience in developing communication gateways for HVAC integration, now available on the cloud for convenient remote management. With these platform, you can easily control and monitor any building from anywhere and at any time.



DAIKIN

MITSUBISHI HEAVY INDUSTRIES, LTD.

FUJITSU

Panasonic

LG

TOSHIBA

AC Cloud Control Functionalities

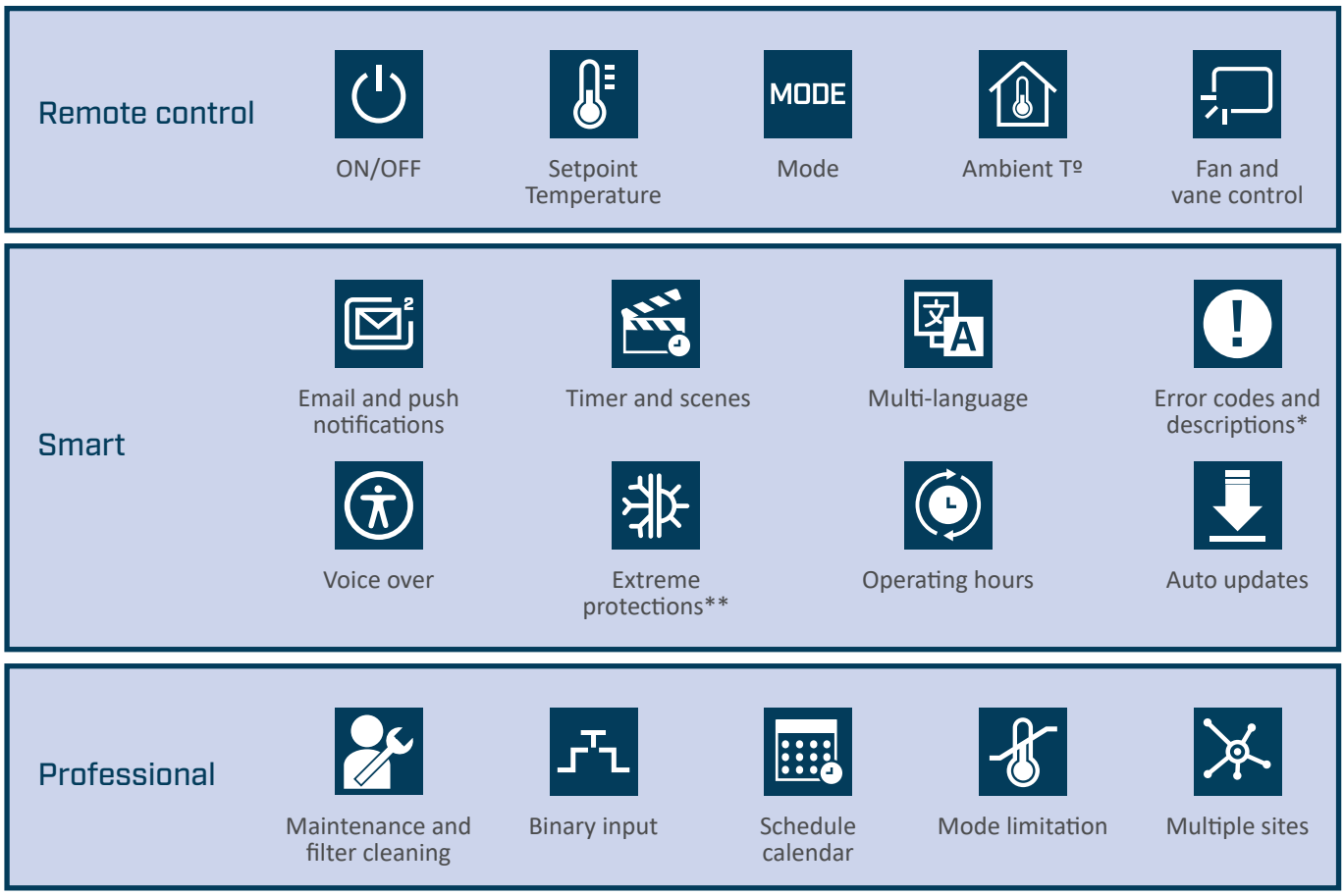

**Not available for the Universal IR gateway.*

***Available for the INWFIMHI001R100, INWFITOS001R100, and INWFIUNI001I000 products.*

AC Cloud Control main strengths

Multiple brands and multiple sites
Organize any brand and model in three different levels.

Energy saving and maintenance functionalities
Special functionalities to help our customers increase energy efficiency.

Secondary users
Manage who can monitor and control each unit.

Professional API for 3rd party integration
Connect your system to Intesis Cloud Control Gateways and offer bidirectional HVAC control to your customers.

Email and push notifications
Be aware of everything that happens in your climate system.

OEM projects
Reduce the time to market and maintenance costs, our R&D resources are at your disposal.

Effortless and Secure Remote AC Management

AC Cloud Control devices are designed to enable remote control of air conditioning units through cloud connectivity. These devices use the local Wi-Fi network to establish a reliable data connection, operating at a frequency of 2.4GHz and compatible with b/g/n. The communication between devices is optimized for IoT, ensuring minimal communication issues.

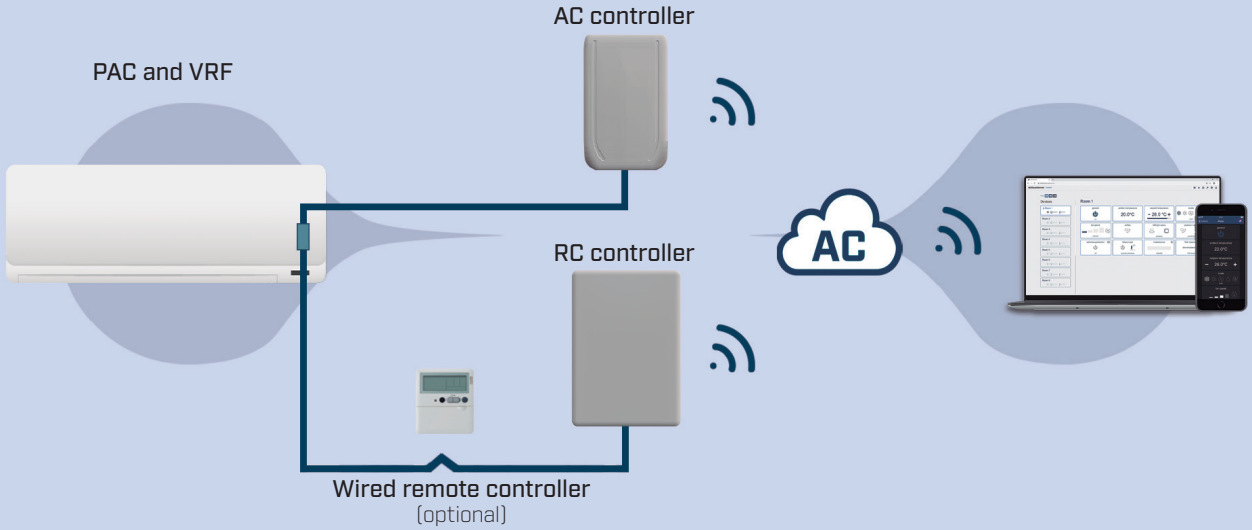

Specific features for brand specific devices

- Devices designed and developed along with the major AC manufacturers, using the proprietary communication protocol of each manufacturer.
- Offers advanced parameters like error signals, error codes, and power consumption*.
- Domestic controllers are directly connected to the internal electronic card, and specifically designed for RAC and domestic lines.
- The VRF and commercial gateways are connected to the HVAC remote control bus, and specifically designed for PAC, RAC, and VRF.

Specific features for universal controller

- Offers compatibility for thousands of AC models.
- Only requires an indoor unit that has an IR receiver working with a standard wireless infrared remote controller.
- The AC feedback is enabled through the embedded IR receiver.
- Allows using the universal and the manufacturer's controller at the same time.
- The Universal controller is specifically designed for PAC, RAC and VRF.



*Depending on the AC brand.

Application	Order Code	Indoor Units
DAIKIN ▶ AC Cloud Control		
AC Domestic units to Wi-Fi (ASCII)	**INWFIDAI001I100**	**1 I.U.**
VRV and Sky systems to Wi-Fi (ASCII)	**INWFIDAI001R100**	**1 I.U.**
FUJITSU ▶ AC Cloud Control		
RAC and VRF systems to Wi-Fi (ASCII)	**INWFIFGL001I100**	**1 I.U.**
	INWFIFGL001R100	**1 I.U.**
LG ▶ AC Cloud Control		
VRF systems to Wi-Fi (ASCII)	**INWFILGE001R100**	**1 I.U.**
MITSUBISHI HEAVY INDUSTRIES, LTD. ▶ AC Cloud Control		
FD and VRF systems to Wi-Fi (ASCII)	**INWFIMHI001I100**	**1 I.U.**
Domestic units to Wi-Fi (ASCII)	**INWFIMHI001R100**	**1 I.U.**
Panasonic ▶ AC Cloud Control		
Etherea AC units to Wi-Fi (ASCII)	**INWFIPAN001I100**	**1 I.U.**
ECOi and PACi systems to Wi-Fi (ASCII)	**INWFIPAN001R100**	**1 I.U.**
TOSHIBA ▶ AC Cloud Control		
VRF and Digital systems to Wi-Fi (ASCII)	**INWFITOS001R100**	**1 I.U.**
UNIVERSAL ▶ AC Cloud Control		
Universal IR air conditioner to Wi-Fi (ASCII)	**INWFIUNI001I000**	**1 I.U. with Binary Input**

More than 2,500 compatible indoor unit models

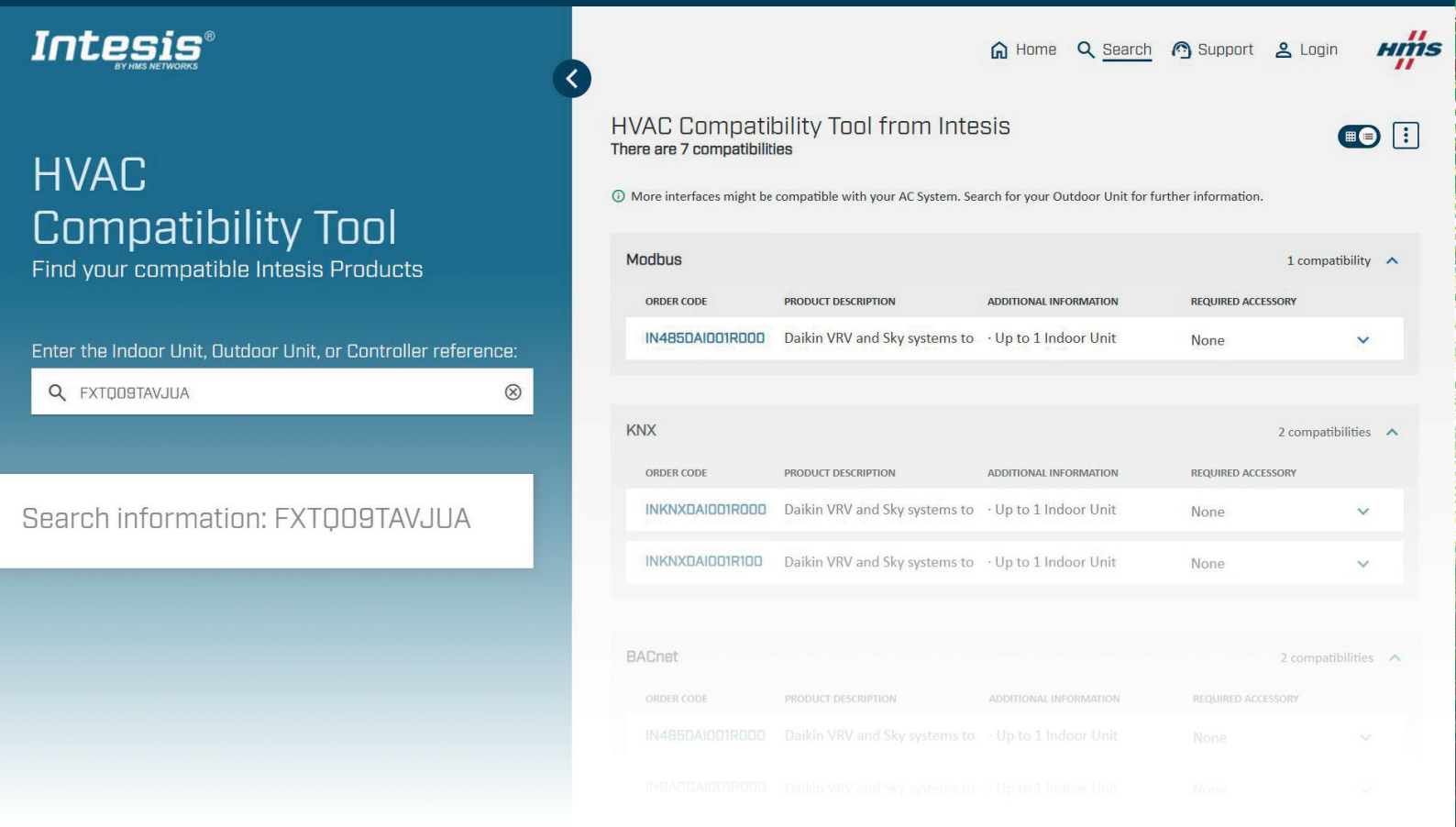

HVAC Compatibility Tool

The new AC compatibility tool provides a fast and reliable way to check the compatibility of air conditioning units with Intesis interfaces.

Forget the time-consuming task of searching an AC unit's reference into an endless compatibility document. Thanks to the search engine of the new web-based tool, get the answer you are looking for with a click.

Search Engine

Type the first letters of your AC reference and get suggestions to make the search even easier.

Updated information

We can ensure updated information thanks to the ease of maintenance of the tool.

Compatible AC units

More than 2,500 models already in our database. New units are included every day!

The support behind

Can't you find your AC unit in the database? Send us a request and we will indicate you the best solution for your AC.

Intesis helps you reduce your carbon footprint

Intesis is committed to reducing the CO2 emissions from air conditioning units by offering the best portfolio of integration products.

For more than 20 years, we have provided gateways to control more than 2 million air conditioning units around the world.

The estimated energy consumption from these units is around 2 billion KWh/year. But thanks to our gateways, 1.153 GWh are saved, which means +340M tons of CO_2 savings.

This figure is equivalent to the total CO_2 that 1.064.809.275 PCs generate during an hour, or the same that 13.6 million trees absorb in one year.



2 Million AC units connected AROUND THE WORLD

+1,153 GWh ENERGY SAVED

+340,000 CO2 TONS SAVED

WHICH IS EQUIVALENT TO

ENERGY CONSUMED BY A CITY WITH 190,000 RESIDENTS IN 1 YEAR

ENERGY CONSUMED BY 427,333 ELECTRIC CARS IN 1 YEAR

CO2 SAVED BY 13,608,146 TREES IN A YEAR

CO2 GENERATED BY 520,986 PASSENGERS FLYING BCN-NY-BCN



Work with HMS.
The number one choice for Industrial Information & Communication Technology.

HMS Networks - Contact

HMS is represented all over the world.
Find your nearest contact here:

www.hms-networks.com/contact-us

Owned by HMS Industrial Networks, Intesis® is a registered trademark in the European Union and is trademarked in the rest of the world. Other marks and words belong to their respective companies. All other product or service names mentioned in this document are trademarks of their respective companies.
Part No: INBR-EN-GE Version 2.5/2026 - © HMS Industrial Networks - All rights reserved - HMS reserves the right to make modifications without prior notice.